Operating instructions EN

Additional languages www.stahl-ex.com

Compact Sheet-Steel Light Fittings

Series 6114/1

Contents

1 General Information 3
1.1 Manufacturer 3
1.2 Information regarding the operating instructions 3
1.3 Further documents 3
1.4 Conformity with standards and regulations 3
2 Explanation of the symbols 3
2.1 Symbols in these operating instructions 3
2.2 Warning notes 4
2.3 Symbols on the device 4
3 Safety notes 4
3.1 Operating instructions storage 4
3.2 Safe use 5
3.3 Intended Use 5
3.4 Modifications and alterations 5
4 Function and device design 6
4.1 Function 6
4.2 Device design 6
5 Technical data 7
6 Transport and storage 9
7 Mounting and installation 10
7.1 Dimensions / fastening dimensions 10
7.2 Mounting / dismounting, operating position 12
7.3 Installation 13
8 Commissioning 18
9 Operation 19
9.1 Troubleshooting 19
10 Maintenance and repair 19
10.1 Maintenance 19
10.2 Maintenance 20
10.3 Repair 20
10.4 Returning the device 21
11 Cleaning 21
12 Disposal 21
13 Accessories and Spare parts 21

EN

1 General Information

1.1 Manufacturer

R. Stahl Schaltgeräte GmbH
Am Bahnhof 30
74638 Waldenburg
Germany

Phone: +49 7942 943-0
Fax: +49 7942 943-4333
Internet: www.stahl-ex.com
E-mail: info@stahl.de

R. STAHL (P) LTD., Plot No. - 5
Malrosapuram Road, Sengundram Indl. Area
Singaperumal Koil, Kancheepuram Dist.,
Tamil Nadu – 603 204, INDIA

Phone: +91 44-30 600 600
Fax: +91 44-30 600 700
Internet: www.rstahl.net
E-mail: sales@rstahl.net

1.2 Information regarding the operating instructions

ID-No.: 251985 / 6114603300
Publication Code: 2016-09-13·BA00·III·en·01

The original instructions are the English edition.
They are legally binding in all legal affairs.

1.3 Further documents

- Datenblatt

Weitere Sprachen, siehe www.stahl-ex.com.

1.4 Conformity with standards and regulations

See certificates and EU Declaration of Conformity: www.stahl-ex.com.
The device has IECEx approval. See IECEx homepage: http://iecex.iec.ch/
Further national certificates can be downloaded via the following link:
http://www.r-stahl.com/downloads/certificates.html.

2 Explanation of the symbols

2.1 Symbols in these operating instructions

Symbol	Meaning
	Tips and recommendations on the use of the device
	Danger due to explosive atmosphere
	Danger due to live components

EN

2.2 Warning notes

Warnings must be observed under all circumstances, in order to minimize the risk due to construction and operation. The warning notes have the following structure:

- Signalling word: DANGER, WARNING, CAUTION, NOTICE
- Type and source of danger/damage
- Consequences of danger
- Taking countermeasures to avoid the danger or damage

	DANGER
	Danger to persons Non-compliance with the instruction results in severe or fatal injuries to persons.

	WARNING
	Danger to persons Non-compliance with the instruction can result in severe or fatal injuries to persons.

	CAUTION
	Danger to persons Non-compliance with the instruction can result in light injuries to persons.

NOTICE
Avoiding material damage Non-compliance with the instruction can result in material damage to the device and / or its environment.

2.3 Symbols on the device

Symbol	Meaning
CE 0158 05594E00	CE marking according to the currently applicable directive.
Ex 02198E00	According to marking, device approved for hazardous areas.

3 Safety notes

3.1 Operating instructions storage

- Read the operating instructions carefully.
- Store the operating instructions at the mounting location of the device.
- Observe applicable documents and operating instructions of the devices to be connected.

3.2 Safe use

Before mounting

- Read and observe the safety notes in these operating instructions!
- Ensure that the contents of these operating instructions have been fully understood by the personnel in charge.
- Use the device in accordance with its intended and approved purpose only.
- Always consult with R. STAHL Schaltgeräte GmbH if using the device under operating conditions which are not covered by the technical data.
- We cannot be held liable for damage caused by incorrect or unauthorized use of the device, or for non-compliance with these operating instructions.

For assembly and installation

- Observe national assembly and installation regulations (e.g. IEC/EN 60079-14).
- Observe national safety and accident prevention regulations.
- During installation and operation, observe the information (characteristic values and rated operating conditions) on the type plates and data plates and information signs located on the device.
- Before installation, make sure that the device is not damaged.

Maintenance, repair, commissioning

- Before commissioning, make sure that the device is not damaged.
- Work on the device, such as installation, maintenance, overhaul, repair, may only be carried out by appropriately authorised and trained personnel.
- Perform only maintenance work or repair described in these operating instructions.

3.3 Intended Use

The light fitting 6114 is equipment

- for lighting areas, work spaces and objects
- optionally available with escape sign for marking of escape routes.
- can be used indoors and outdoors
- for stationary mounting
- for use in Zones 1, 21, 2, 22 and in the safe area

3.4 Modifications and alterations

	DANGER
EX	Explosion hazard due to modifications and alterations to the device! Non-compliance results in severe or fatal injuries. • Do not modify or alter the device.

i	No liability or warranty for damage resulting from modifications and alterations.

EN

4 Function and device design

	DANGER
EX	Explosion hazard due to improper use! Non-compliance results in severe or fatal injuries. • Use the device only in accordance with the operating conditions described in these operating instructions. • Use the device only for the intended purpose specified in these operating instructions.

4.1 Function

Application range

The light fitting 6114 is equipment used for lighting areas, work equipment and objects.
The light fitting can be equipped with an escape sign for marking of escape routes.
It can be used indoors and outdoors.
The light fitting is approved for use in hazardous areas of zones 1, 2, 21 and 22.

Mode of operation

When opening the light fitting, the voltage supply automatically switches itself off via a central lock (standard version)

4.2 Device design

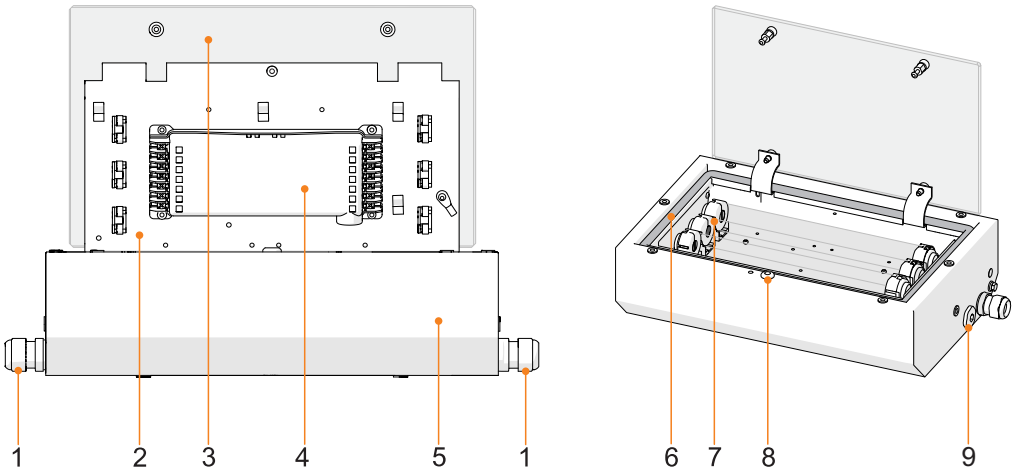

1	Cable gland	6	Seal
2	Reflector plate	7	Lamp holder
3	Glass pane	8	Central lock
4	Ballast	9	Stopping plug
5	Luminaire enclosure		

EN

5 Technical data

Explosion Protection

Global (IECEx)

Gas and dust	IECEx BVS 16.0040 Ex e d IIC T4 Gb Ex tb IIIC T80°C Db

Europe (ATEX)

Gas and dust	BVS 16 ATEX E 053 Ⓔx II 2G Ex e d IIC T4 Gb Ⓔx II 2D Ex tb IIIC T80°C Db

Certifications and certificates

Certificates	IECEx, ATEX, India (PESO)

Technical Data

Electrical data

Ballast

	6114/1..8-1...-....-..	6114/1..8-3...-....-..
Quantity EB	1	1
Lamp start	Cold start	Cold start
Voltage	220 ... 240 V AC	220 ... 240 V AC
DC voltage in case of ignition	198 ... 264 V DC	198 ... 264 V DC
DC voltage during operation	176 ... 264 V DC	176 ... 264 V DC
Frequency	0 / 50 ... 60 Hz	0 / 50 ... 60 Hz
Lamp standard	IEC 60081	IEC 60081
Lamp power	1 x 8 W	3 x 8 W
Nominal current	48 mA	106 mA

Inrush current

	6114/1..8-.8..-.3..-..	6114/1..8-39..-.4..-..
I_{peak}	18.3 A	36.6 A
Δt	138 µs	138 µs

maximum number of luminaires per miniature circuit breaker at 230 V:

	6114/1..8-.8..-.3..-..			6114/1..8-39..-.4..-..		
Type	**10 A**	**16 A**	**20 A**	**10 A**	**16 A**	**20 A**
B	21	34	42	10	16	21
C	35	56	70	17	28	35

Power factor cos φ

1-lamp	≥ 0.77
3-lamp	≥ 0.94

EN

Technical Data

Ambient conditions

Operating temperature range	-20 °C ... +50 °C
Storage temperature	-30 °C ... +65 °C

Mechanical data

Degree of protection	IP65 IP64 when using breather 8162 IP66 when using the flushing frame (IEC 60598)
Protection class	I (with internal PE-terminal)
Impact strength (IK code)	IK10 (IEC 62262)
Material	
Enclosure	Sheet-steel, powder-coated, white, similar to RAL 9016 Stainless steel SS316L (V4A | 1.4404) brushed
Lens	Safety glass
Seal	Foamed silicone seal in luminaire enclosure
Luminaire locking	Central locking; glass cover hinged for access

Mounting / Installation

Cable glands	1x M20/M25 left and 2x M20/M25 right, 2x cable glands and 2 stopping plugs as standard
Connection	Spring clamp terminal 0.5 to 4 mm^2 3-pole (2 x L1, 2 x N, 2 x PE) 5-pole (2 x L1, 2 x L2, 2 x L3, 2 x N, 2 x PE) Screw terminal 0.75 to 4 mm² solid / stranded 0.75 to 6 mm² solid 3-pole (2 x L1, 2 x N, 2 x PE) 5-pole (2 x L1, 2 x L2, 2 x L3, 2 x N, 2 x PE)
Through wiring	Loop in/loop out possible up to 12 A max.
Assembly	**Wall mounted luminaire** M8 threads on both sides of the luminaire for mounting of wall mounting brackets. **Recessed light fitting:** Variant 1: flushing frame attached to enclosure using M6 screws Variant 2: flushing frame welded to enclosure **Note:** For both installation versions, the luminaires must either be mounted on the back or the sides of the luminaire using the M8 threads.

Technical Data

Address module

Type	6114/1118-.8..-.4.1-..
Function	Address and switching module for R. STAHL emergency lighting systems according to VDE 0108: The module is used for the monitoring of individual luminaires and for the control of network and safety lights. The module offers the following functions: • Control of the luminaire (ON / OFF) and function test • Up to 20 addresses can be configured for each electric circuit by means of a coding switch • The type of connection of the luminaire (continuous light, stand-by light or switched light) is freely programmable • Mixed operation within one circuit is possible
Input voltage	(Input between L‘ (1) and N (2)) U_N 230 (+10 % / -15 %) V AC, 50 / 60 Hz U_{DC} 175 ... 275 V DC
Control input	(between L (4) and N (5)) U_N 230 (+10 % / -15 %) V AC, 50 / 60 Hz
Connected power (output to light)	P 4 ... 150 W
Ambient temperature	$T_{a\ (Module)}$ -10 ... +50 °C

Alternative material:

Enclosure:

- brushed stainless steel S304 (1.4301 or V2A)

For further technical data, see www.stahl-ex.com.

6 Transport and storage

- Transport and store the device only in the original packaging.
- Store the device in a dry place (no condensation) and vibration-free.
- Do not drop the device.

EN

7 Mounting and installation

	DANGER
	Explosion hazard due to incorrect installation of the device! Non-compliance results in severe or fatal injuries. • Carry out installation strictly according to the instructions and national safety and accident prevention regulations to maintain the explosion protection. • Select and install the electrical device so that explosion protection is not affected due to external influences, i.e. pressure conditions, chemical, mechanical, thermal and electric impact such as vibration, humidity and corrosion (see IEC/EN 60079-14). • The device must only be installed by trained qualified personnel who is familiar with the relevant standards.

7.1 Dimensions / fastening dimensions

Dimensional drawings (All dimensions in mm [inches]) – Subject to modifications

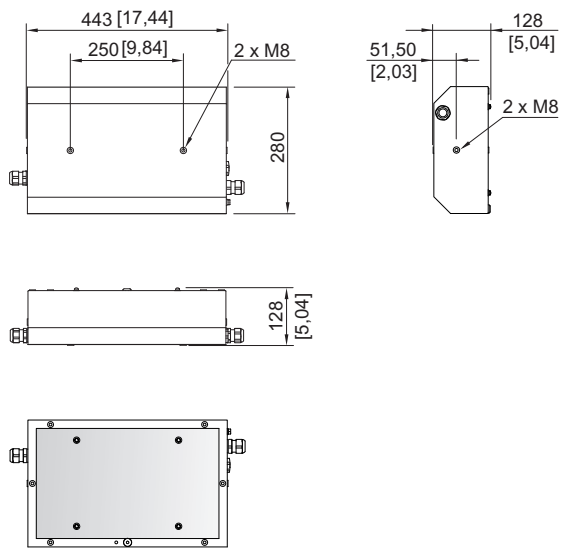

compact light fitting sheet steel

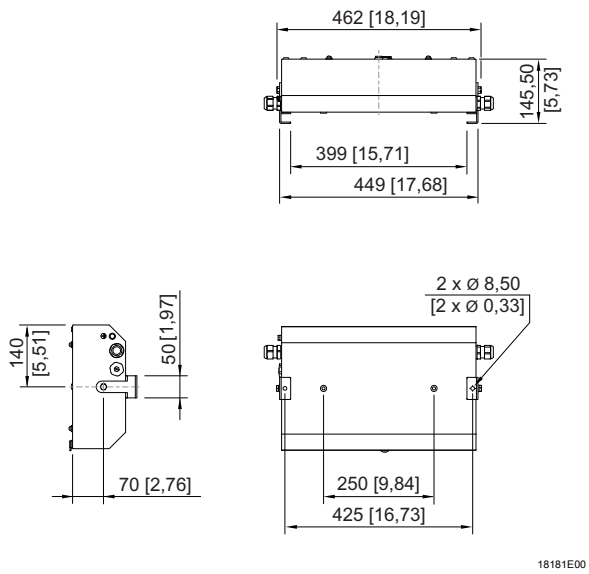

with C-Lux adaptor

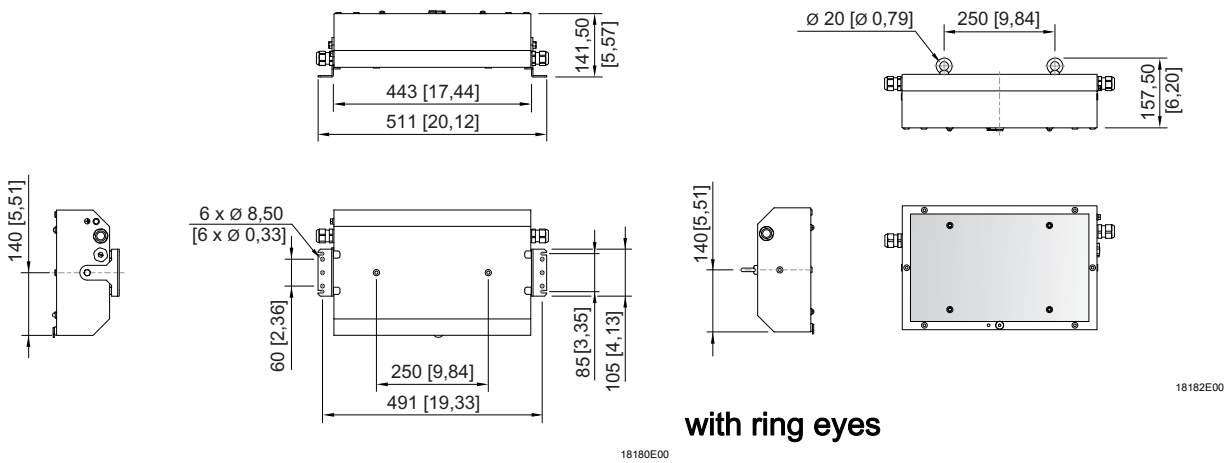

with ring eyes

with wall and ceiling mounting bracket

Dimensional drawings (All dimensions in mm [inches]) – Subject to modifications

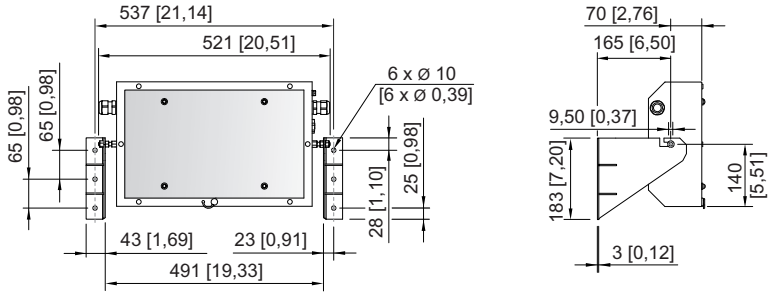

18166E00

with wall mounting bracket (luminaire swivel-mounted)

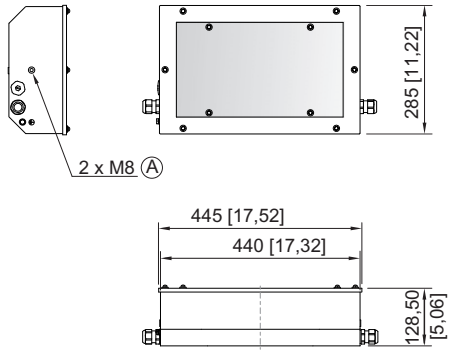

18183E00

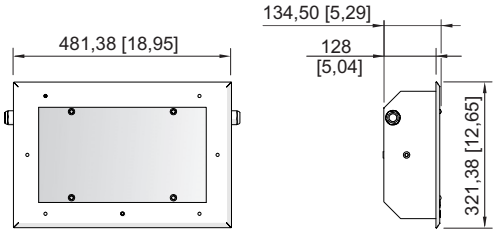

18164E00

with recessed flushing frame (fullfils IP66)

with flushing frame for IP66

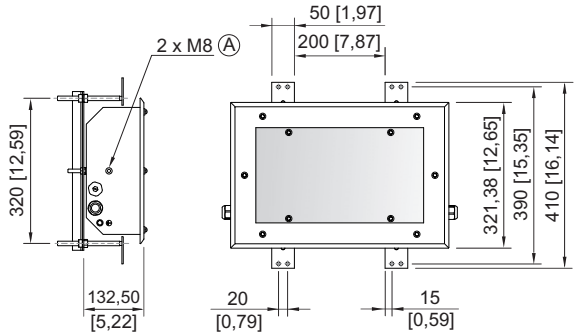

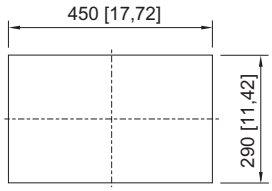

18167E00

cut-out

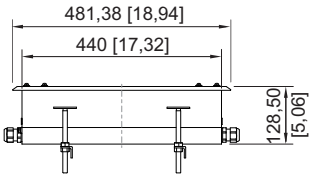

18184E00

with fastening set for wall and ceiling mounting

A - Insert nut sealed with blind plug

EN

7.2 Mounting / dismounting, operating position

	DANGER
	Explosion hazard due to electrostatic discharge! Non-compliance results in severe or fatal injuries. Do not use of the luminaire in strong charge generating environments! The following processes/activities should be avoided: • pneumatic conveyance of dust • spraying of electrons • fast-rotating brushes

	DANGER
	Explosion hazard due to inadmissible heating! Non-compliance results in severe or fatal injuries. • Avoid external heat sources and/or direct sunlight (risk of change of temperature class or change of maximum permissible surface temperature). • Do not exceed the maximum ambient temperature due to external heat sources (premature failure of equipment).

	The luminaire is suitable for wall and ceiling mounting. Wall mounting must be performed with the central lock directed downwards. The mounting position with light emission upwards is not allowed when mounted outdoors.

	For outdoor use, we recommend to install a 8162/1 breather from R. STAHL Schaltgeräte GmbH. The breather guarantees compliance with degree of protection IP64 in all mounting positions.

7.2.1 Frame mounitng

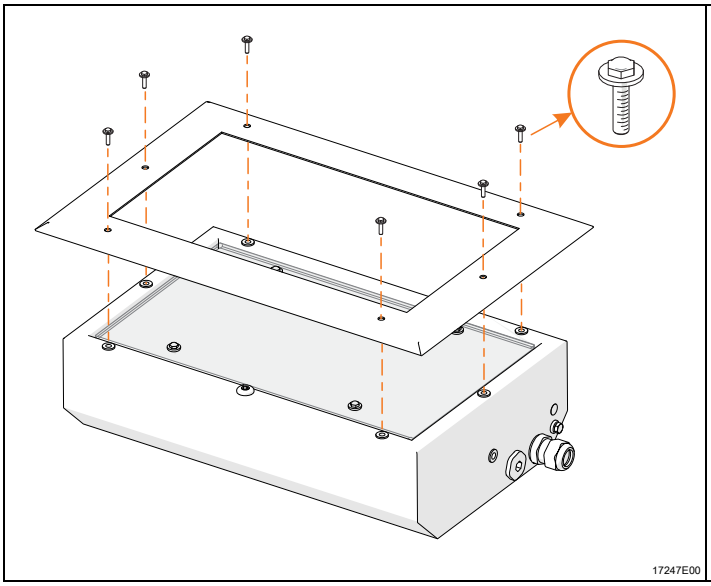

- Mount the frame as shown in the figure (left)

7.2.2 Mounting bracket

Example: Assembly of mounting bracket

All other brackets are mounted as shown in the example.

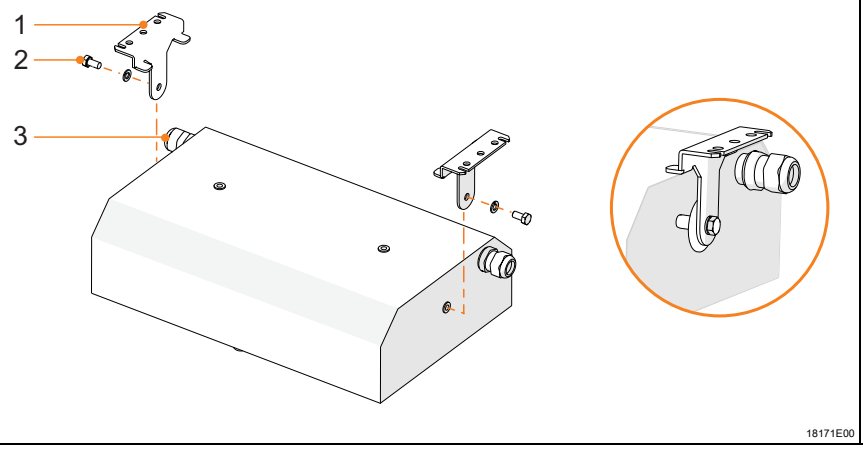

- Mount bracket (1) with screw (2) (10 Nm) as shown in the figure (left).

Legend

1	= wall mounting bracket
2	= screw
3	= Cable gland

7.2.3 Ring Bolt Assembly

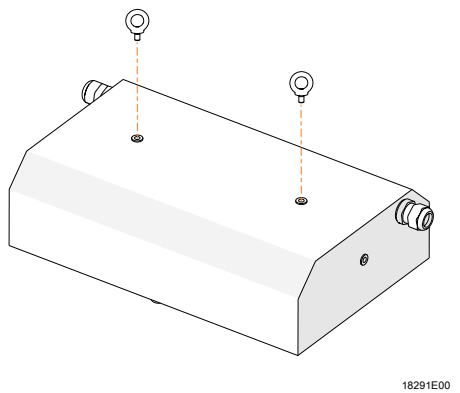

- Screw the 2 ring eyes into the mounting part.
- Attach the mounting part (i.e. with chains) to the ceiling.
- Feed the connection cable through the corresponding cable gland.

7.3 Installation

7.3.1 Opening and Closing of the Enclosure

DANGER

Risk of electric shock due to improper opening!
Non-compliance results in severe or fatal injuries.

- Open luminaires without switch only in de-energized state (see information plate on the lock)!

EN

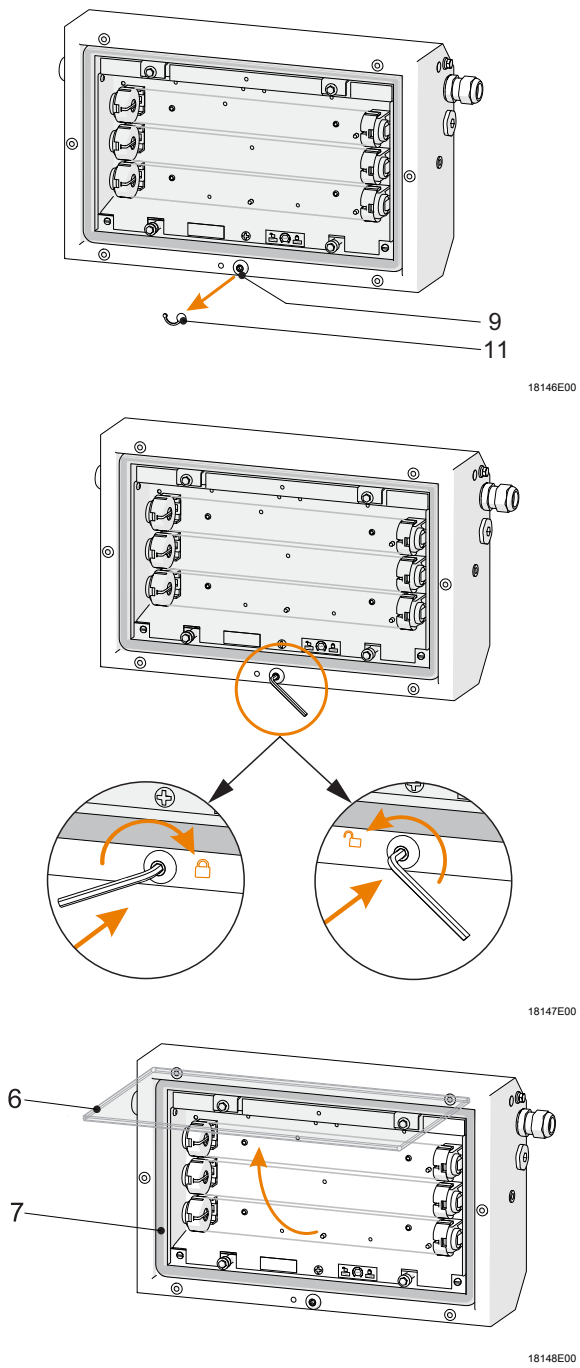

- Remove the closing cap (11) of the central lock (9).
- Open the central lock (9) with a M5 spanner by pushing and turning it.
- Swivel down the glass pane (6).
- Proceed in reverse order to close.
- Ensure that the glass pane (6) is correctly positioned on the sealing edge (7).
- Push the closing cap (11) onto the central lock (9) (protection against dirt).

Switching the luminaire

- Version without switch: Disconnect the luminaire from the power supply and secure it against being switched on again.
- Version with switch: The luminaire is positively disconnected from the power supply by actuating the central lock.
- In open end position and with translucent cover swivelled down, a restart lock-out device prevents the central lock from being actuated.

EN

i	Do not use force! When the translucent cover is closed, the central lock is released.

Opening and closing the reflector plate

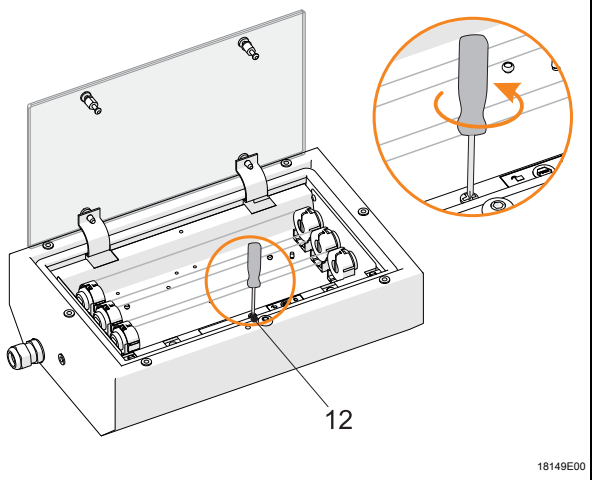

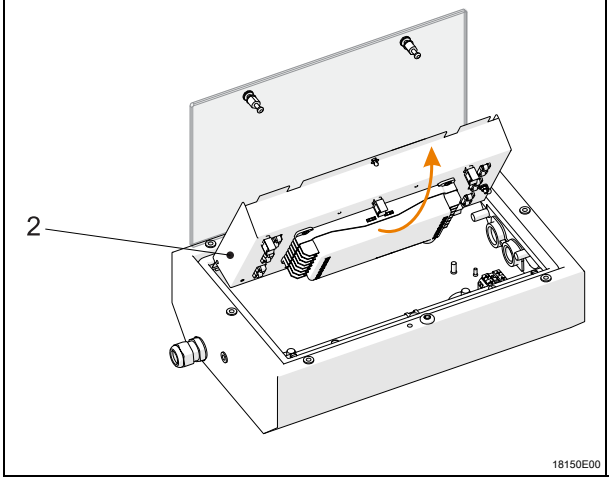

Opening:
- Unlock the reflector plate (2) by turning the two square head bolts (12).
- Swivel down the reflector plate (2).

Closing:
- Fold up the reflector plate (2).
- Lock the reflector plate (2) by turning the two square head bolts (12).

7.3.2 Electrical connections

Electrical connection

Observe the maximum clamping possibility of the connecting terminals (see chapter "Technical data").
For optional screw terminals, two conductors per clamping unit can be clamped (ingoing and outgoing wiring).

Observe the following when connecting to the main supply:
- Clamping must be carried out precisely!
- Do not clamp any part of the conductor insulation!
- Do not interchange the conductors!
- Observe the technical regulations when connecting the conductor!
- Clamp the conductor firmly.
- Do not remove the terminal cover of optional screw terminals to clamp the conductor!
- Optional screw terminals: Firmly tighten screws (tightening torque 2 Nm, for unused clamping units 0.7 Nm)!

EN

Installing cable in the luminaire

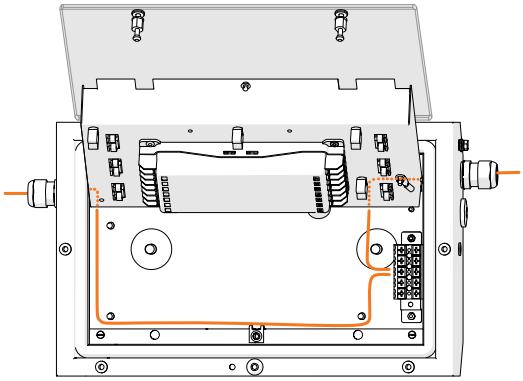

- Install the cable in the luminaire as marked (see figure on the left).
- Use factory mounted cable holders.

Connection terminals

Standard: Spring clamp terminals

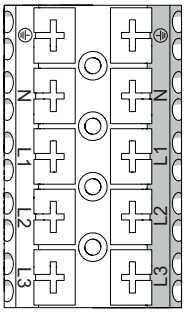

15516E00

0.5 ... 4 mm^2 solid / stranded
Stripping length: 10 ... 11 mm

Optional: Screw terminals

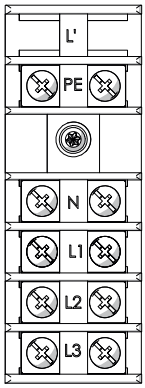

15438E00

0.75 ... 4 mm^2 finely and extra finely stranded
0.75 ... 6 mm^2 solid
Stripping length: 10 ... 11 mm

Legend

L1, L2, L3	= phase
N	= neutral conductor
PE	= protective conductor

7.3.3 Cable entries

The standard luminaire is delivered with 3 entries, 1 cable gland, 2 cable entries and 2 stopping plugs.

Tightening torques for components from R. STAHL Schaltgeräte GmbH

Luminaires with installed cable entries and stopping plugs from R. STAHL Schaltgeräte GmbH must be tightened using the following values:

		Tightening torque	
		Connection thread	Pressure screw
Cable entry 8161	M20 x 1.5	2.3 Nm	1.5 Nm
	M25 x 1.5	3.0 Nm	2.0 Nm
Stopping plugs 8290	M20 x 1.5	1.0 Nm	–
	M25 x 1.5	1.5 Nm	–

Luminaires with approved cable entries and stopping plugs; not supplied by R. STAHL Schaltgeräte GmbH

	DANGER
EX	Explosion hazard due to impermissible cable entries and stopping plugs! Non-compliance results in severe or fatal injuries. • Only use separately certified cable entries and stopping plugs.

Please observe the following:

- the required dust resistance!
- the required type of protection!
- the required temperature resistance!
- the IP degree of protection according to the rating plate!
- the operating instructions of the cable entries and stopping plugs!
- the required tightening torques!
- the range of the permissible cable diameter!

EN

8 Commissioning

	DANGER
	Explosion hazard due to incorrect installation! Non-compliance results in severe or fatal injuries. • Check the device for proper installation before commissioning. • Comply with national regulations.

NOTICE
Malfunction or device damage caused by condensation. Non-compliance can result in material damage! • operate the luminaire continuously or periodically over extended periods of time. • avoid thermal bridges.

Before commissioning, ensure the following:

- Check the mounting and installation.
- Inspect enclosure for damage.
- If necessary, remove foreign bodies.
- If necessary, clean the connection chamber.
- Check if the conductors have been inserted correctly.
- Check if all screws and nuts have been tightened firmly.
- Check whether all the cable entries and stopping plugs have been tightened firmly.
- Check if all conductors have been clamped firmly.
- Check if the line voltage and the rated operational voltage are consistent.
- Check if the permissible conductor diameter for the corresponding cable entries have been used.
- Check if the device is closed according to regulations.

9 Operation

9.1 Troubleshooting

Observe the following troubleshooting plan for troubleshooting:

Cause of error	Troubleshooting
The lamp was incorrectly inserted.	Insert the lamp correctly.
The lamp is defective.	Replace the lamp.
The ballast is defective.	Replace the ballast.
The switch is defective.	Replace the switch.
The lamp reached its end of service life.	Replace the lamp.

If the error cannot be eliminated using the mentioned procedures:
- Contact R. STAHL Schaltgeräte GmbH.

For fast processing, have the following information ready:
- Type and serial number of the device
- Purchase information
- Error description
- Intended use (in particular input / output wiring)

10 Maintenance and repair

	CAUTION
	Risk of electric shock or malfunction of the device due to unauthorized work! Non-compliance can result in light injuries! • Before carrying out work on the device, switch off voltage supply. • Work performed on the device must only be carried out by authorized and appropriately trained qualified electricians. • To be carried out as per EN60079-17 and as per EN60079-19.

10.1 Maintenance

- Consult the relevant national regulations to determine the type and extent of inspections.
- Adapt inspection intervals to the operating conditions.

During maintenance of the device, check at least:
- the tight fit of the clamping screws holding the cables,
- if the device enclosure and / or protective enclosure have cracks or other visible signs of damage,
- the seals for ageing and damage,
- the device inside and outside for pollution and clean it if neccessary,
- compliance with the permissible temperatures (according to EN 60079),
- if the device is used in accordance with its designated use.

EN

10.2 Maintenance

	CAUTION
	Danger of electric shock due to energised parts! Non-compliance can result in minor injuries! • All connections must be disconnected from the power supply. • Secure the connections against unauthorized switching.

	Observe the relevant national regulations in the country of use.

10.3 Repair

	DANGER
	Explosion hazard due to improper repair! Non-compliance results in severe or fatal injuries. • Repair work on the devices must be performed only by R. STAHL Schaltgeräte GmbH.

10.3.1 Replacement of lamps

	Only use fluorescent lamps with pins made of brass.

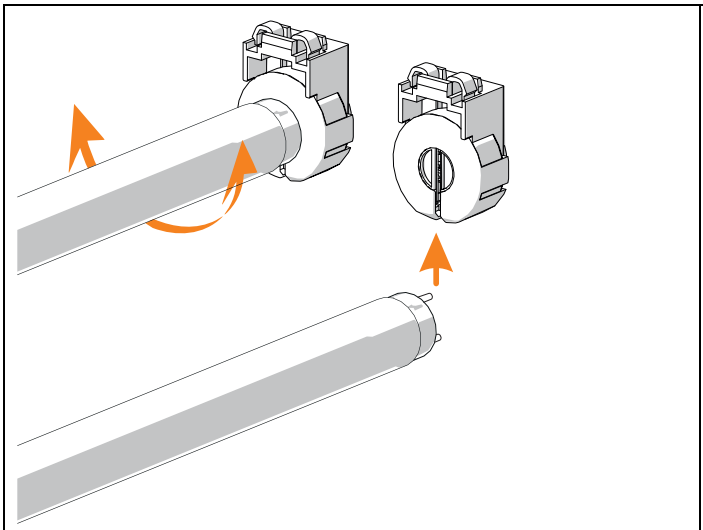	• Insert both lamp bases of the lamp into the holder slots as far as possible. • Put the lamp into operating position by turning it to the right or to the left. • Dismounting is carried out in reverse order.

When replacing the lamps, ensure the following:
- undamaged lamp base
- The holders have a springy length compensation of 2.5 mm each.
- fit of the lamp; locking of the lamp fit after rotation
- timely replacement of the lamps
- service life specified by the manufacturer
- EOL- safety shutdown: The EB switches off the lamp at the end of the service life.

10.4 Returning the device

Use the "Service form" to return the device if repair or service is required. On the internet site "www.stahl-ex.com" under "Downloads > Customer service":

- Download the service form.
- Fill out the service form.
- Send the device along with the service form in the original packaging to R. STAHL Schaltgeräte GmbH.

11 Cleaning

- Clean the device only with a cloth, brush, vacuum cleaner or similar items.
- When cleaning with a damp cloth, use water or mild, non-abrasive, non-scratching cleaning agents.
- Do not use aggressive detergents or solvents.

12 Disposal

- Observe national and local regulations and statutory regulation regarding disposal.
- Separate materials when sending it for recycling.
- Ensure environmentally friendly disposal of all components according to the statutory regulations.

13 Accessories and Spare parts

NOTICE
Malfunction or damage to the device due to the use of non-original components. Non-compliance can result in material damage. • Use only original accessories and spare parts from R. STAHL Schaltgeräte GmbH.

i	For accessories and spare parts, see data sheet on our homepage www.stahl-ex.com.

EU-Konformitätserklärung
EU Declaration of Conformity
Déclaration de Conformité UE

R. STAHL Schaltgeräte GmbH • Am Bahnhof 30 • 74638 Waldenburg, Germany
erklärt in alleiniger Verantwortung, *declares in its sole responsibility, déclare sous sa seule responsabilité,*

dass das Produkt: *that the product:* *que le produit:*	**Kompakt Stahlblechleuchte** *Compact sheet steel light fitting* *Lumière en tôle d'acier compact*
Typ(en), *type(s), type(s):*	**6114/1**

mit den Anforderungen der folgenden Richtlinien und Normen übereinstimmt.
is in conformity with the requirements of the following directives and standards.
est conforme aux exigences des directives et des normes suivantes.

Richtlinie(n) / *Directive(s) / Directive(s)*		**Norm(en)** / *Standard(s) / Norme(s)*
2014/34/EU *2014/34/EU* *2014/34/UE*	**ATEX-Richtlinie** *ATEX Directive* *Directive ATEX*	EN 60079-0:2012 + A11:2013 EN 60079-1:2007 EN 60079-7:2007 EN 60079-31:2014
Kennzeichnung, *marking, marquage:*		Ex **II 2 G Ex e d IIC T4 Gb** **II 2 D Ex tb IIIC T 80 °C Db** CE **0158**
EU-Baumusterprüfbescheinigung: *EU Type Examination Certificate:* *Attestation d'examen UE de type:*		**BVS 16 ATEX E 053** (DEKRA EXAM GmbH, Dinnendahlstraße 9, 44809 Bochum, Germany, NB 0158)
Produktnormen nach Niederspannungsrichtlinie: *Product standards according to Low Voltage Directive:* *Normes des produit pour la Directive Basse Tension:*		EN 60598-1:2015 EN 62471:2008
2014/30/EU *2014/30/EU* *2014/30/UE*	**EMV-Richtlinie** *EMC Directive* *Directive CEM*	EN 61547:2009 EN 55015:2013 EN 61000-3-2:2014 EN 61000-3-3: 2013
2011/65/EU *2011/65/EU* *2011/65/UE*	**RoHS-Richtlinie** *RoHS Directive* *Directive RoHS*	EN 50581:2012

Waldenburg, 2016-08-30

Ort und Datum
Place and date
Lieu et date

i.V.

Dr. A. Kaufmann
Leiter BU Leuchten & Signalgeräte
Head of BU Lightings & Signalling
Directeur BU Eclairage & Appareils de signalisation

C. Hermanowski
Geschäftsführer
Managing Director
Directeur général