Operating instructions

Additional languages r-stahl.com

EN

GRP Flameproof Visual Signal - 5 Joule

Series FL6S

EN

Contents

EN

1 General Information

1.1 Manufacturer

R. STAHL Schaltgeräte GmbH
Business Unit Lighting & Signalling
Nordstr. 10
99427 Weimar
Germany

Phone: +49 3643 4324
Fax: +49 3643 4221-76
Internet: r-stahl.com
E-mail: info@r-stahl.com

R. STAHL Schaltgeräte GmbH

Am Bahnhof 30
74638 Waldenburg
Germany

Phone: +49 7942 943-0
Fax: +49 7942 943-4333
Internet: r-stahl.com
E-mail: info@r-stahl.com

1.2 Information regarding the operating instructions

ID-No.: 224618 / FL6S60300010
Publication Code: 2022-03-14·BA00·III·en·03

The original instructions are the English edition.
They are legally binding in all legal affairs.

1.3 Further documents

- Data sheet

For documents in additional languages, see r-stahl.com.

1.4 Conformity with standards and regulations

IECEx, ATEX, EU Declaration of Conformity and further national certificates can be downloaded via the following link: https://r-stahl.com/en/global/support/downloads/.
IECEx is also available at: http://iecex.iec.ch/

EN

2 Explanation of the symbols

2.1 Symbols in these operating instructions

Symbol	Meaning
	Tips and recommendations on the use of the device
	General danger
	Danger due to explosive atmosphere
	Danger due to energised parts

☼ = Strobe

⏚ = Earth

☎ = Telephone initiate

2.2 Warning notes

Warnings must be observed under all circumstances, in order to minimize the risk due to construction and operation. The warning notes have the following structure:

- Signalling word: DANGER, WARNING, CAUTION, NOTICE
- Type and source of danger/damage
- Consequences of danger
- Taking countermeasures to avoid the danger or damage

	DANGER
	Danger to persons Non-compliance with the instruction results in severe or fatal injuries to persons.

	WARNING
	Danger to persons Non-compliance with the instruction can result in severe or fatal injuries to persons.

EN

	CAUTION
	Danger to persons Non-compliance with the instruction can result in light injuries to persons.

NOTICE
Avoiding material damage Non-compliance with the instruction can result in material damage to the device and / or its environment.

2.3 Symbols on the device

Symbol	Meaning
CE 0158 05594E00	CE marking according to the current applicable directive.
Ex 02198E00	According to marking, device certified for hazardous areas.
15649E00	Input
15648E00	Output

3 Safety notes

3.1 Operating instructions storage

- Read the operating instructions carefully and store them at the mounting location of the device.
- Observe applicable documents and operating instructions of the devices to be connected.

3.2 Safe use

- Read and observe the safety notes in these operating instructions!
- Observe characteristic values and rated operating conditions on the rating and data plates!
- Observe additional information plates on the device!
- Use the device in accordance with its intended and approved purpose only!
- We cannot be held liable for damage caused by incorrect or unauthorized use or by non-compliance with these operating instructions.
- Before installation and commissioning, make sure that the device is not damaged!
- Work on the device (installation, maintenance, overhaul, repair) may only be carried out by appropriately authorized and trained personnel.

EN

3.3 Modifications and alterations

	DANGER
	Explosion hazard due to modifications and alterations to the device! Non-compliance results in severe or fatal injuries. • Do not modify or alter the device.

	No liability or warranty for damage resulting from modifications and alterations.

4 Function and device design

	DANGER
	Explosion hazard due to improper use! Non-compliance results in severe or fatal injuries. • Use the device only according to the operating conditions described in these operating instructions.

4.1 Function

Product series FL6S is designed to provide a visual signal which can be used to alert, warn or draw attention to an event. Corrosion resistance is a key feature of the device which is ideally suited for applications in the harshest of environments both onshore and offshore.

The device must be regarded as a supplementary alarm indicator when used for alerting/evacuating the occupants of the buildings/structures.

In hazardous areas the devices have explosion protection for ATEX/IECEx Zones 1 & 2 for gas and 21 & 22 for dust. Gas groups covered are IIB & IIC, and dust protection for IIIC.

The device is not intended for continuos use.

The life of the xenon flash tube is guaranteed for the following number of flashes:

Variant	Number of flashes
5 J	2 million

EN

5 Technical data

Explosion Protection

Global (IECEx)

Gas and dust	IECEx BAS 14.0064 IEC 60079-0: 2011 / IEC 60079-1: 2007 / IEC 60079-31: 2013 Ex d IIB T* Ta -** ... +** °C Gb Ex d IIC T* Ta -** ... +** °C Gb Ex tb IIIC T*** °C Ta -** ... +** °C Db IP66

Europe (ATEX)

Gas and dust	Baseefa14ATEX0126 EN 60079-0: 2012 / EN 60079-1: 2007 / EN 60079-31: 2009 (IEC 60079-31: 2013) Ⓔx II 2 G Ex d IIB T* Ta -** ... Ta +** °C Gb Ⓔx II 2 G Ex d IIC T* Ta -** ... Ta +** °C Gb Ⓔx II 2 D Ex tb IIIC T*** °C Ta -** ... +** °C Db IP66

Product variant table

Power and voltage	Temperature class	Max. surface temperature	Ambient temperature range
5 J 24 V DC	T6	T73 °C	-60 to +40 °C
	T5	T88 °C	-60 to +55 °C
	T4	T103 °C	-60 to +70 °C
5 J 48 V DC	T6	T73 °C	-60 to +40 °C
	T5	T88 °C	-60 to +55 °C
	T4	T103 °C	-60 to +70 °C
5 J 115 V AC	T5	T83 °C	-60 to +40 °C
	T4	T113 °C	-60 to +55 °C
5 J 230 V AC	T6	T75 °C	-60 to +40 °C
	T5	T90 °C	-60 to +55 °C
	T4	T105 °C	-60 to +70 °C

Certifications and certificates

Certificates	IECEx, ATEX, Kazakhstan (TR), Russia (TR), Belarus (TR)

Ambient conditions

Functional ambient temperature range	24 V DC / 48 V DC: -50 to +XX* °C 115 V AC: -55 to +XX* °C 230 V AC: -55 to +XX* °C XX* max. ambient temperature see certificate

EN

Technical Data

Electrical data

Rated operational voltage	24 or 48 V DC 115 or 230 V AC
Current consumption	24 V DC 320 mA 48 V DC 170 mA 115 V AC 204 mA 230 V AC 75 mA
Operational parameters	$^{+}/_{-}$10 %
Line monitoring	yes

Inrush current

24 V DC / 48 V DC		115 V AC		230 V AC	
I_{max}	duration	I_{max}	duration	I_{max}	duration
3.2 A	220 µs	11 A	500 µs	8 A	50 µs

Luminous characteristics

Light source	Xenon flash tube
Flash energy	5 J
Flash rate	1/s

Light intensity

	Effective candela (cd)	Luminous flux (lm)
clear	62	12.5

Lens colour	amber, red, green, opal, blue, clear, yellow, magenta

Mechanical data

Material	
Enclosure	glass reinforced polyester
Lens cover	polycarbonate
Wire guard	stainless steel
Assembly parts	stainless steel
Bracket	stainless steel
Labels	polyester foil, adhesive
Degree of protection	IP66 / IP67 acc. to IEC 60529

Mounting / Installation

Connection	2.5 mm^2 terminals

For further technical data, see r-stahl.com.

6 Transport and storage

- Transport and store the device only in the original packaging.
- Store the device in a dry place (no condensation) and vibration-free.
- Do not drop the device.

EN

7 Mounting and installation

7.1 Dimensions / fastening dimensions

Dimensional Drawings (All Dimensions in mm [inches]) - Subject to Alterations

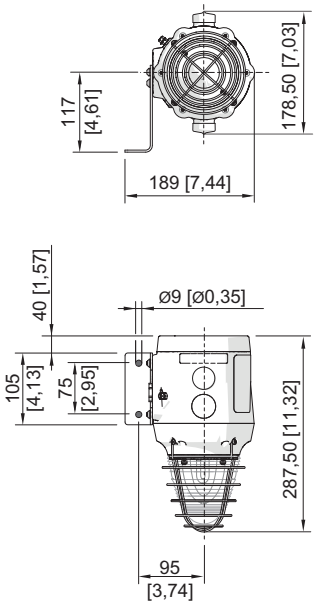

GRP Visual Signal Series FL6S with L-Bracket

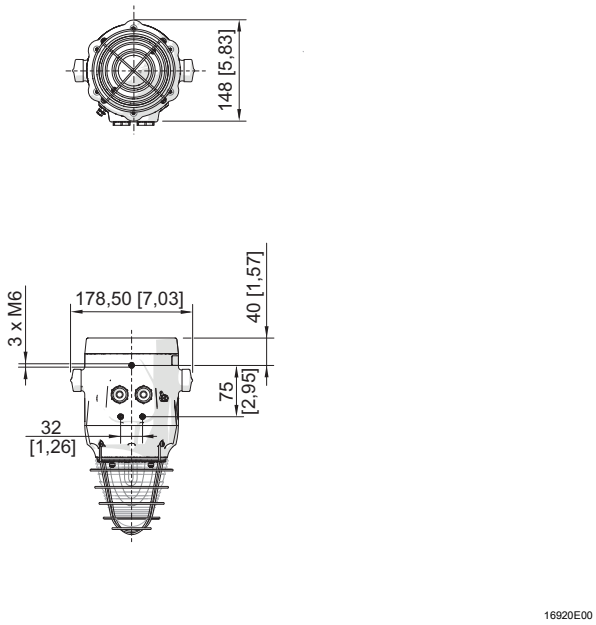

GRP Visual Signal Series FL6S without L-Bracket

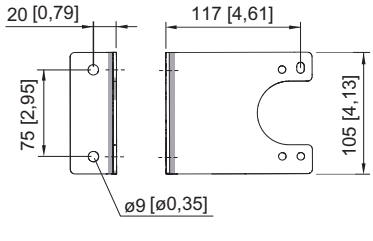

L-Bracket

EN

7.2 Mounting / dismounting, operating position

	DANGER
	Risk of explosion! Risk of injuries and material damage! • Terminal sleeves are fitted, they must be gas-tight and applied with a suitable tool.

	DANGER
	Explosion hazard! Risk of injuries and material damage! • Carefully remove or replace the components. • Exposed joint surfaces must not be damaged and must be protected from dust and dirt. • Install the end flanges squarely without applying any force. Do not use a hammer or other tools when working on the flanges and do not use the fixing screws to pull down the flanges.

- Mount the device on a flat surface suitable for its weight.
- Insert the cables using certified and flameproof cable glands which are suitable for the gas group.
- Close unused entries using certified and flameproof stopping plugs.

7.2.1 Installation Conditions for Electrical Connection

	DANGER
	Explosion hazard! Risk of injuries and material damage! • Only use cable glands with corresponding certificate. The cable glands must be flameproof (Ex d) and suitable for the type of cable used. • Close unused open holes in the enclosure with flameproof stopping plugs. • Close unused cable glands using flameproof plugs. • Cable glands, stopping plugs and plugs must meet the requirements of IEC/EN 60079-14. • Installation of the cable gland must be performed in accordance with the manufacturer's instructions. • Cable entry temperature may reach 70 °C. • To ensure degree of protection IP 66, a non-hardening sealant must be applied to the threads.

	DANGER
	Danger due to energised parts! **Risk of death or severe injuries!** • Before opening and dismounting the device, disconnect it from the power supply. • Secure the device against unauthorized switching.

EN

7.2.2 Installation with mounting bracket

- Fix bracket to wall

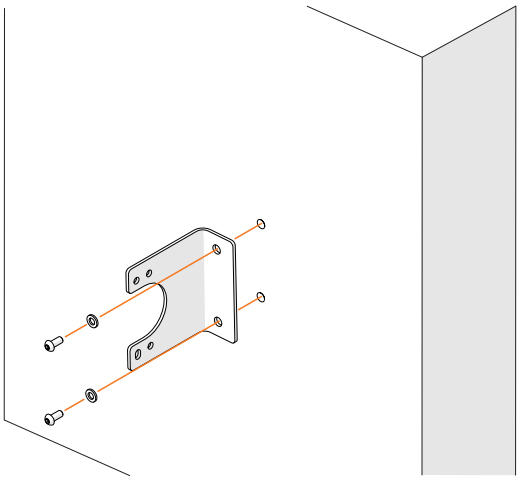

17161E00

- Attach device

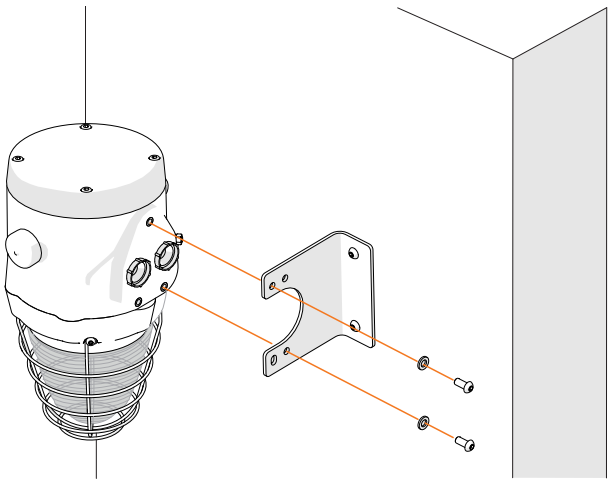

17225E00

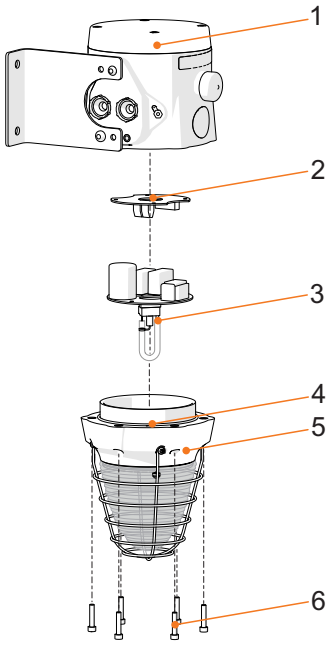

17158E00

1 End cap
2 PCB Termination board
3 PCB and Xenon flash tube
4 Seal
5 Strobe flange
6 Cheese-head screws M5 x 25

- Loosen 6 x cheese head screws (6) and remove strobe flange (5)

i	Access to the M5 cheese head screws is obscured by the wire guard. Use a ball end Allen key to allow for the off-axis angle which is required.

- Prepare cable gland
- Ensure earth connection
- Install cable gland
- Connect cables (see electrical connection)

EN

7.2.3 Reassembly of Enclosure

- Lift strobe flange towards device.
- Connect PCB using the plug.
- Install strobe flange.
- Replace cheese-head screws M5 x 25 (see information below) and tighten the screws with a tightening torque of 4 Nm.

7.2.4 Electrical Connection

Key Components

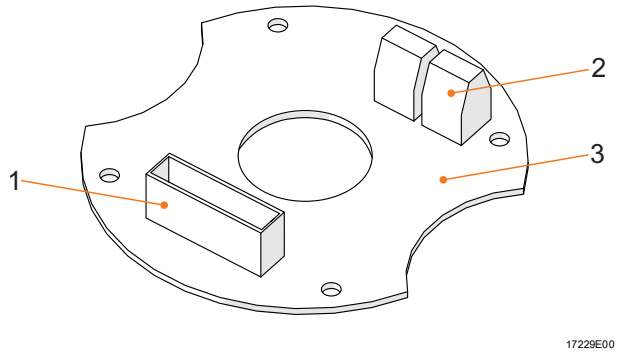

1 Plug for flash PCB
2 Terminal blocks
3 PCB Termination board

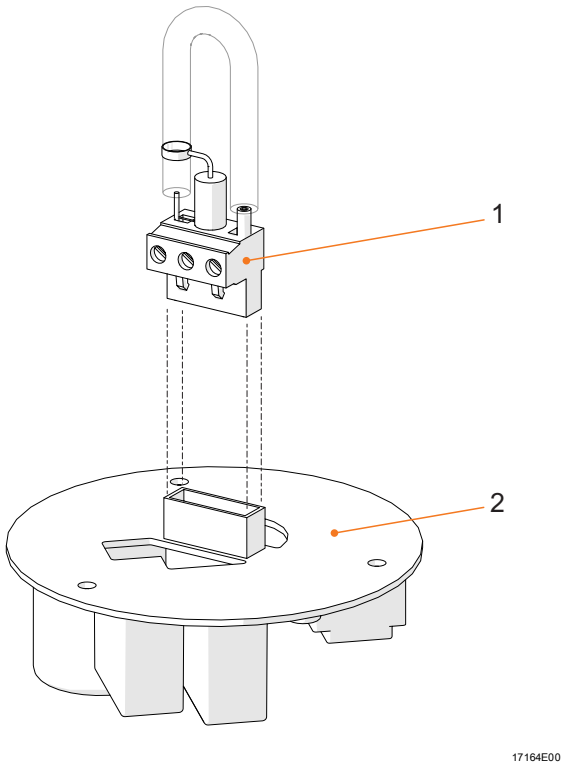

1 Xenon flash tube
2 Flash PCB

Key components FL6S

i	• Do not touch the Xenon flash tube at anytime during the installation/assembly of the device.

EN

Cable Connection

i	• The terminals accept wires of 2.5 mm^2 or 14 to 18 AWG.

Interconnection of devices parallel

Up to 10 devices with common supplies may be connected as a single system loop. See wiring diagrams for further information.

Circuit diagrams

i	**Line monitoring** for devices with DC • by reverse polarity • by connecting an EOL resistor between 0 V and +V. The resistance value is defined by the system developer.

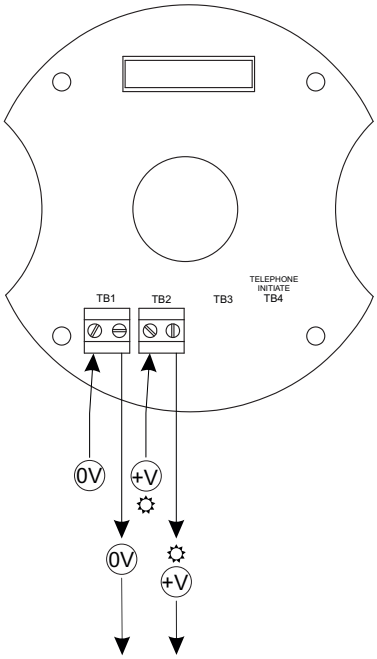

15758E00

Circuit diagram DC voltages

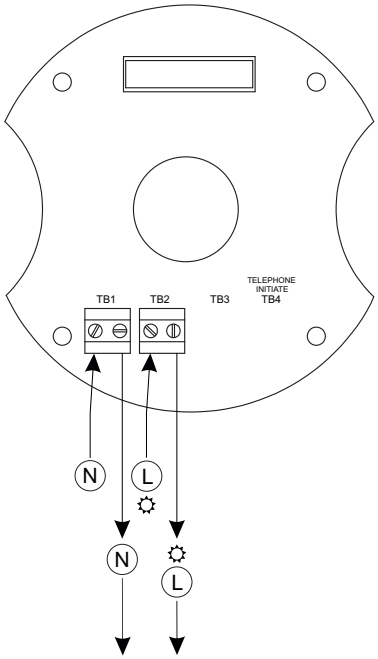

15759E00

Circuit diagram AC voltages

☼ = Strobe

EN

7.2.5 Earth Connection

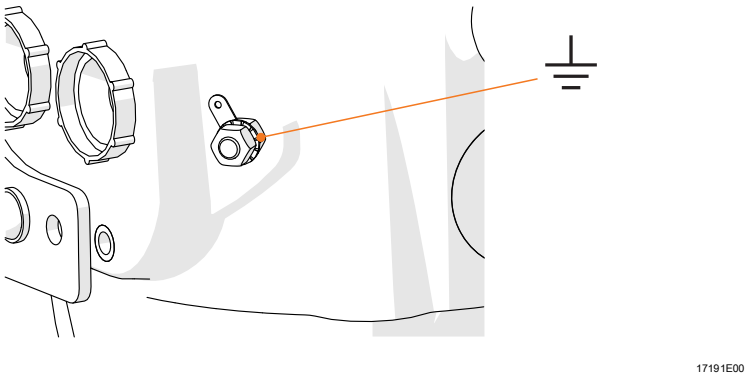

Earth connection

Use of metallic cable glands
A slip on earth tag is provided with each device. This should be connected to the external earth stud detailed above.

Device material
The GRP material used for the device enclosure has electrically conductive properties. The material is antistatic and prevents build-up of electrical charges on its surface. Surface resistivity < 10^8 Ω accordance to IEC 60093

7.3 Installation

	WARNING
	Danger of electric shock due to energised parts! Non-compliance can result in severe or fatal injuries. • All connections and wiring must be disconnected from the power supply. • Secure the connections against unauthorized switching.

	DANGER
	Explosion hazard! Risk of injuries and material damage! • Operate the device only if it is not damaged. • If the thread is damaged, the device must be replaced immediately. • Handle the device and the components very carefully. • Exposed joint surfaces must be protected from dust, dirt and damage. • Mount the end flanges squarely and do not apply any force. • Do not use a hammer or any other metal instruments to work on the flange. • Do not use the fixing screws to pull down the flange. • Install the device only in a clean and dry operating environment.

EN

8 Commissioning

	DANGER
	Explosion hazard due to incorrect installation! Non-compliance results in severe or fatal injuries. • Check the device for proper installation and function before commissioning. • Comply with the national regulations.

Before commissioning, ensure the following:
- the device has been installed according to regulations.
- the power supply voltage and the rated operational voltage are identical.
- the required cable diameter for cable glands has been used.
- the cable entries and stopping plugs have been securely tightened.
- the cables are correctly connected.
- the connection has been performed correctly.
- all screws and nuts are tightened according to regulations.
- the connection chamber is clean.
- the device is not damaged.
- no foreign bodies are inside the device.
- the device is sealed according to regulations.
- flash circuit board is connected.

9 Operation

The device is used to warn and alert by means
- of a visual signal.

24 V DC and 48 V DC voltage variants - visual signal

	At temperatures below -40°C initial start-up and stabilization of flash frequency may be delayed.

9.1 Troubleshooting

If an error occurs please re-visit the earlier sections of this document.
If the error cannot be eliminated using the mentioned procedures:
- Contact R. STAHL Schaltgeräte GmbH.

For fast processing, have the following information ready:
- Type and serial number
- Purchase information
- Error description
- Intended use (in particular input / output wiring)

EN

10 Maintenance and repair

	WARNING
	Risk of electric shock or malfunctioning of the device due to unauthorized work! Non-compliance can result in severe injuries and material damage. • Work performed on the device must only be carried out by appropriately authorized and qualified electricians.

10.1 Maintenance

	Observe the relevant national regulations in the country of use.

- Determine the type and extent of inspections in compliance with the relevant national regulations.
- Adapt inspection intervals to the operating conditions.

The following tests and measures must be carried out during regular maintenance.

Check	Measures
the permissible ambient temperature	If exceeding the permissible ambient temperature or falling below the device must be taken out of operation.
the enclosure components for formation of cracks and damage.	Replace the exchangeable enclosure components. If the enclosure components are non-exchangeable, the device must be taken out of operation.
its intended use	If the device is not used according to its intended use, it must be taken out of operation.
if the conductors are clamped properly	clamp loose conductors tightly.
the cables for ageing and damage	replace damaged or aged cables.
the seals for ageing and damage	replace damaged, aged and porous seals and completely change enclosure components with foamed seal.

EN

10.2 Repair

	DANGER
	Explosion hazard due to improper repair! Non-compliance results in severe or fatal injuries. • Repair work on the devices must be performed only by R.STAHL Schaltgeräte GmbH.

10.3 Returning the device

- Only return or package the devices after consulting R. STAHL!
  Contact the responsible representative from R. STAHL.

R. STAHL's customer service is available to handle returns if repair or service is required.

- Contact customer service personally.

or

- Go to the r-stahl.com website.
- Under "Support" > "RMA" > select "RMA-REQUEST".
- Fill out the form and send it.
  You will automatically receive an RMA form via email. Please print this file off.
- Send the device along with the RMA form in the packaging to
  R. STAHL Schaltgeräte GmbH (refer to chapter 1.1 for the address).

11 Cleaning

- Clean the device only with a cloth, brush, vacuum cleaner or similar items.
- When cleaning with a damp cloth, use water or mild, non-abrasive, non-scratching cleaning agents.
- Do not use aggressive detergents or solvents.

EN

12 Disposal

- Observe national and local regulations and statutory regulation regarding disposal.
- Separate materials when sending it for recycling.
- Ensure environmentally friendly disposal of all components according to the statutory regulations.

13 Accessories and Spare parts

NOTE
Malfunction or damage to the device due to the use of non-original components. Non-compliance can result in material damage. • Use only original accessories and spare parts from R. STAHL Schaltgeräte GmbH.

i	For accessories and spare parts, see data sheet on our homepage r-stahl.com.

EG/EU-Konformitätserklärung
EC/EU Declaration of Conformity
Déclaration de Conformité CE/UE

R. STAHL Schaltgeräte GmbH • Am Bahnhof 30 • 74638 Waldenburg, Germany
erklärt in alleiniger Verantwortung, *declares in its sole responsibility, déclare sous sa seule responsabilité,*

dass das Produkt: *that the product:* *que le produit:*	**GRP Optisches Signal - 5 Joule** *GRP Visual Signal 5 Joule* *Feu à éclat GRP - 5 joules*
Typ(en), *type(s), type(s):*	**FL6S**

mit den Anforderungen der folgenden Richtlinien und Normen übereinstimmt.
is in conformity with the requirements of the following directives and standards.
est conforme aux exigences des directives et des normes suivantes.

Richtlinie(n) *Directive(s)* *Directive(s)*			**Norm(en)** *Standard(s)* *Norme(s)*
Bis/*Until/Jusque* **2016-04-19:**		**Ab/*From/De*** **2016-04-20:**	EN 60079-0: 2012 + A11: 2013 EN 60079-1: 20014 EN 60079-31:2014
94/9/EG: *94/9/EC:* *94/9/CE:*	**ATEX-Richtlinie** *ATEX Directive* *Directive ATEX*	**2014/34/EU:** *2014/34/EU:* *2014/34/UE:*	
Kennzeichnung, *marking, marquage:*			Ex **II 2 G Ex d IIB T. Gb** **II 2 D Ex tb IIIC T´...°C Db** **CE 0158**
EG-Baumusterprüfbescheinigung: *EC Type Examination Certificate:* *Attestation d'examen CE de type:*			**Baseefa 14 ATEX 0126** (Baseefa Ltd., Rockhead Business Park Staden Lane, Buxton Derbyshire, SK17 9RZ United Kingdom)
Produktnormen nach Niederspannungsrichtlinie: *Product standards according to Low Voltage Directive:* *Normes des produit pour la Directive Basse Tension:*			EN 60947-1: 2007 + A1: 2011/A2:2014
Bis/*Until/Jusque* **2016-04-19:**		**Ab/*From/De*** **2016-04-20:**	EN 61000-6-1: 2007 EN 61000-6-2: 2006 EN 61000-6-3: 2007 + A1: 2011 EN 61000-6-4: 2007 + A1: 2011
2004/108/EG: *2004/108/EC:* *2004/108/CE:*	**EMV-Richtlinie** *EMC Directive* *Directive CEM*	**2014/30/EU:** *2014/30/EU:* *2014/30/UE:*	
2011/65/EU *2011/65/EU* *2011/65/UE*	**RoHS-Richtlinie** *RoHS Directive* *Directive RoHS*		EN 50581:2012

Waldenburg, 01.02.2016	*i.V.*	*i.V.*
Ort und Datum *Place and date* *Lieu et date*	**Dr. A. Kaufmann** **Leiter BU Leuchten & Signalgeräte** *Head of BU Lightings & Signalling* *Directeur BU Eclairage & Appareils de Signal*	**J.-P. Rückgauer** **Leiter Qualitätsmanagement** *Director Quality Management* *Directeur Assurance de Qualité*