Operating instructions

Additional languages r-stahl.com

EN

Emergency luminaire with LED

Series EXLUX 6409/4

STAHL

EN

Contents

EN

1 General information

1.1 Manufacturer

R. STAHL Schaltgeräte GmbH
Am Bahnhof 30
74638 Waldenburg
Germany

Tel.: +49 7942 943-0
Fax: +49 7942 943-4333
Internet: r-stahl.com
E-mail: info@r-stahl.com

R. STAHL (P) LTD., Plot No. - 5
Malrosapuram Road, Sengundram Indl. Area
Singaperumal Koil, Kancheepuram Dist.,
Tamil Nadu – 603 204, INDIA

Tel.: +91 44-67 300 600
Fax: +91 44-67 300 700
Internet: r-stahl.com/en/in
E-mail: sales@rstahl.net

R. STAHL Schaltgeräte GmbH
Business Unit Lighting & Signalling
Nordstr. 10
99427 Weimar
Germany

Tel.: +49 3643 4324
Fax: +49 3643 4221-76
Internet: r-stahl.com
E-mail: info@r-stahl.com

1.2 Information regarding the operating instructions

ID no.: 266665 / 640960300140
Publication code: 2024-03-06·BA00·III·en·04

The original instructions are the German edition.
They are legally binding in all legal affairs.

1.3 Further documents

- Data sheet

For documents in other languages, see r-stahl.com.

1.4 Conformity with standards and regulations

For certificates and declaration of conformity, see r-stahl.com.

EN

2 Explanation of symbols

2.1 Symbols used in these operating instructions

Symbol	Meaning
	Tips and recommendations on the use of the device
	Danger due to explosive atmosphere
	Danger due to live components

2.2 Warning notes

Warning notes must be observed under all circumstances, in order to minimise the risk resulting from design engineering and operation. The warning notes have the following structure:

- Signalling word: DANGER, WARNING, CAUTION, NOTICE
- Type and source of danger/damage
- Consequences of danger
- Taking countermeasures to avoid the danger or damage

	DANGER
	Danger to persons Non-compliance with the instruction results in severe or fatal injuries to persons.

	WARNING
	Danger to persons Non-compliance with the instruction can result in severe or fatal injuries to persons.

	CAUTION
	Danger to persons Non-compliance with the instruction can result in light injuries to persons.

NOTICE
Avoiding material damage Non-compliance with these instructions can result in material damage to the device and/or its surroundings.

EN

2.3 Symbols on the device

Symbol	Meaning
CE 0158 05594E00	CE marking according to the current applicable directive.
UK CA 8505 23486E00	UKCA marking according to the currently applicable directive.
Ex 02198E00	Device certified for hazardous areas according to the marking.

3 Safety notes

3.1 Operating instructions storage

- Carefully read the operating instructions.
- Store the operating instructions at the mounting location of the device.
- Observe applicable documents and operating instructions of the devices to be connected.

3.2 Safe use

Before mounting

- Read and observe the safety notes in these operating instructions!
- Ensure that the contents of these operating instructions are fully understood by the personnel in charge.
- Use the device in accordance with its intended and approved purpose only.
- Always consult R. STAHL Schaltgeräte GmbH if using the device under operating conditions which are not covered by the technical data.
- We cannot be held liable for damage to the device caused by incorrect or unauthorised use or non-compliance with these operating instructions.

For mounting and installation

- Observe national mounting and installation regulations (e.g. IEC/EN 60079-14).
- Observe national safety and accident prevention regulations.
- During installation and operation, observe the information (characteristic values and rated operating conditions) on the rating, data and information plates located on the device.
- Before installation, make sure that the device is not damaged.

Maintenance, repair, commissioning

- Before commissioning, make sure that the device is not damaged.
- Work on the device, such as installation, maintenance, overhaul, repair, may only be carried out by appropriately authorised and trained personnel.
- Only perform the maintenance work and repairs described in these operating instructions.

EN

3.3 Intended use

The luminaire is equipment
- for lighting areas, work areas and objects
- for emergency lighting in case of power failure
- that can be used indoors and outdoors
- for stationary mounting
- for use in Zones 21, 2, 22 and in the safe area

3.4 Modifications and alterations

	DANGER
EX	Explosion hazard due to modifications and alterations to the device! Non-compliance results in severe or fatal injuries. • Do not modify or change the device.

i	No liability or warranty for damage resulting from modifications and alterations.

4 Function and device design

	DANGER
EX	Explosion hazard due to improper use! Non-compliance results in severe or fatal injuries. • Use the device only according to the operating conditions described in these operating instructions. • Use the device only for the intended purpose specified in these operating instructions.

4.1 Function

Application range

The luminaire 6409/4 is equipment used for lighting areas, work equipment and objects. It can be used indoors or outdoors and is suitable for emergency lighting in case of power failure.
The luminaire is approved for use in hazardous areas of Zones 2, 21 and 22.

Mode of operation

A weekly functional test and annual rated operating time test have been permanently integrated.
When opened using a central lock, the luminaire switches off automatically (optional).
The operating hours can be determined and the luminaire can be dimmed and switched via an optional DALI interface.

EN

4.2 Device design

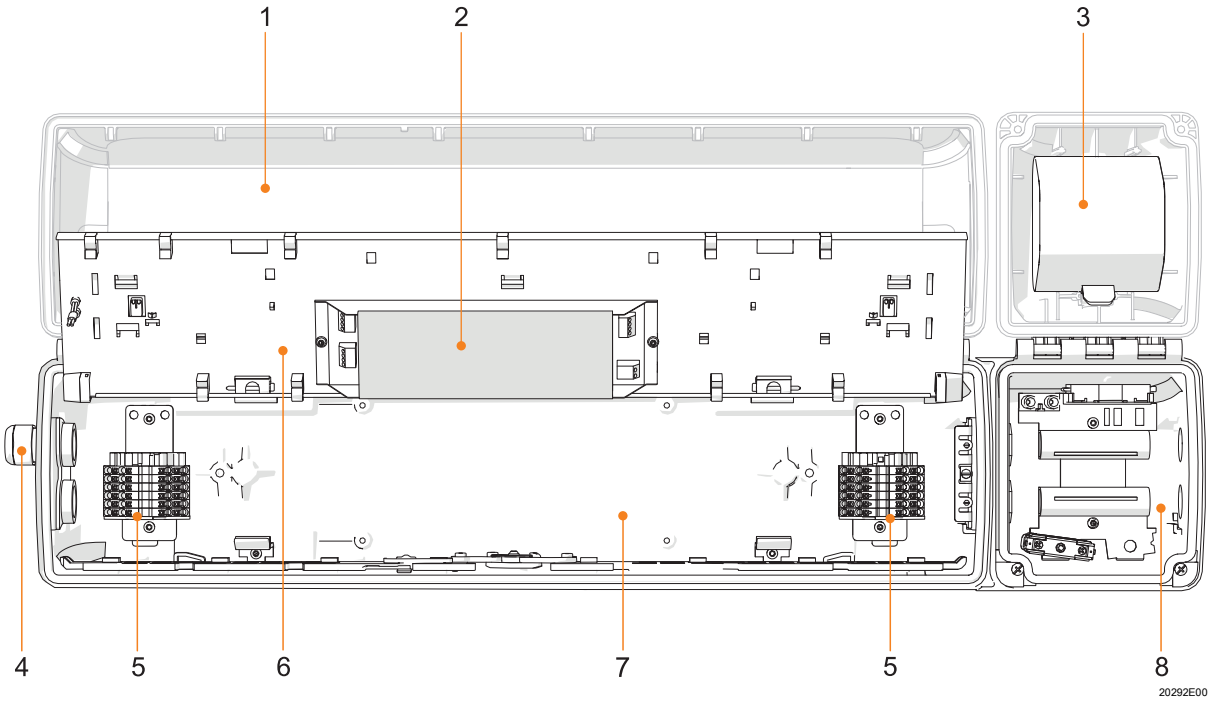

1	Translucent cover	5	Connection terminal
2	Control gear	6	Mounting plate
3	Battery	7	Luminaire enclosure
4	Cable entry	8	Battery enclosure

EN

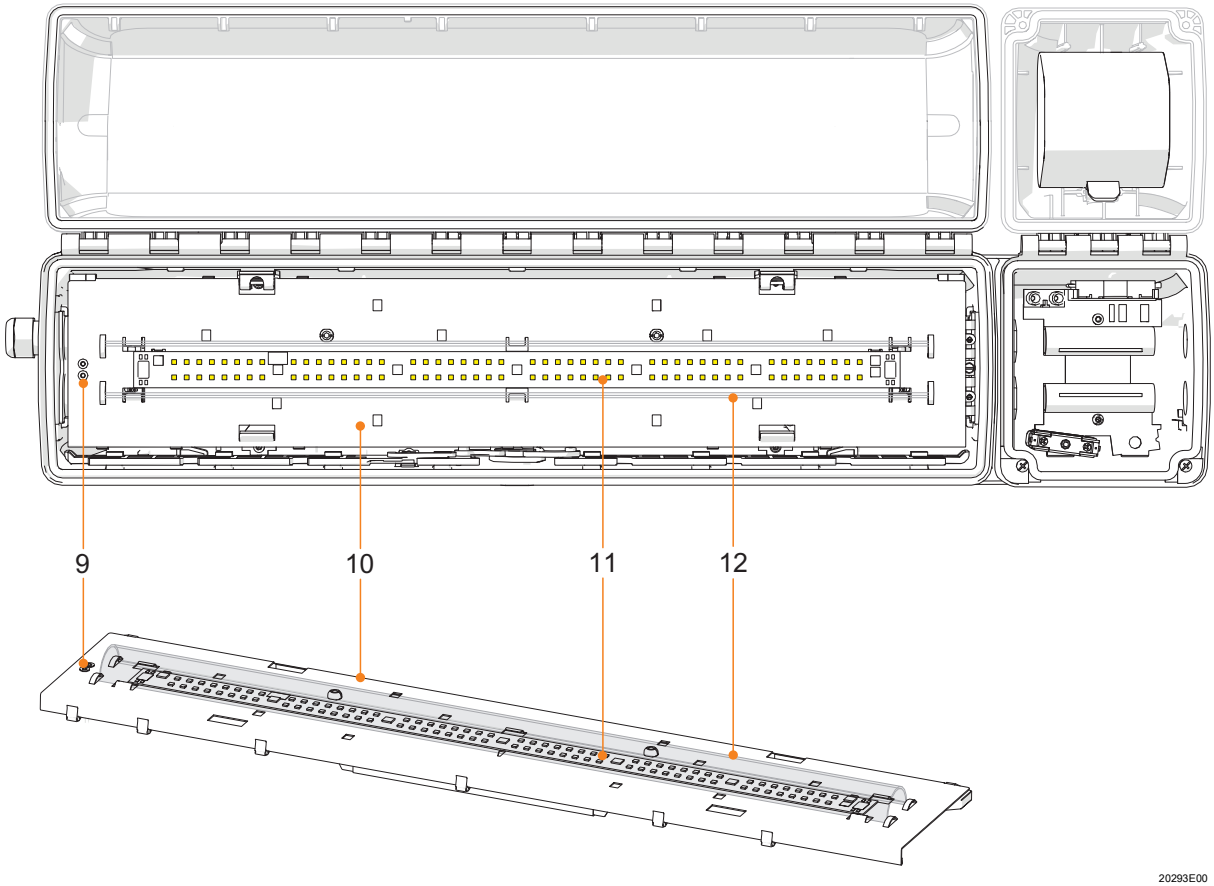

9	LED indicator	11	LED PCB
10	Mounting plate	12	Diffuser

EN

5 Technical data

Explosion protection

Global (IECEx)

Gas and dust	IECEx IBE 16.0047 Ex db ec IIC T4 Gc Ex tc IIIC T100 °C Dc Ex tb op is IIIC T100 °C Db

Europe (ATEX, UKEX)

Gas and dust	IBExU 16 ATEX 1233, CML 21UKEX1561 Ⓔx II 3 G Ex db ec IIC T4 Gc Ⓔx II 3 D Ex tc IIIC T100 °C Dc Ⓔx II 2 D Ex tb op is IIIC T100 °C Db

Certifications and certificates

Certifications	IECEx, ATEX, UKEX

Technical data

Electrical data

Rated operational voltage	AC: 110 to 240 V ±10%; 50 to 60 Hz
Rated insulation voltage	250 V

Rated operational current

	Standard + DALI Size 2		Standard + DALI Size 4	
At nominal voltage	110 V; 60 Hz	230 V; 50 Hz	110 V; 60 Hz	230 V; 50 Hz
During stand-by switching	< 0.08 A	< 0.08 A	< 0.08 A	< 0.08 A
In continuous mode	0.24 A	0.13 A	0.43 A	0.21 A

Start-up current

I_{peak} = 62 A; Δt = 122 µs

Maximum number of luminaires per miniature circuit breaker at 230 V [1]:

Type	10 A	16 A	20 A	25 A
B	10	17	21	27
C	18	28	36	45
K	36	57	72	90

[1] Typical values for 1-pole miniature circuit breaker at +25 °C and nominal voltage 230 V AC; the exact number depends on the miniature circuit breaker used

Power factor

	Size 2	Size 4
230 V; 50 Hz	≥ 0.90	≥ 0.95
110 V; 60 Hz	≥ 0.98	≥ 0.99

Class	I (with internal PE connection)
Protective conductor current	≤ 0.5 mA
THD	Size 2: < 15% Size 4: < 8%

EN

Technical data

Luminous characteristics

Standard

Light colour: Neutral white
Colour temperature [K] = 5000 K
Colour rendering R_a: ≥ 80
Application example: Lighting of desktops

	6409/4.2.		6409/4.4.	
Size	2		4	
Power consumption [W]	25		45	
Diffuser	with	without	with	without
Luminous flux [lm]	2,910	3,230	5,810	6,460
Luminaire efficacy [lm/W]	116	129	129	144

Optional

Colour temperature [K]: 2700 K (warm white), 4000 K (warm neutral white), 5700 K (cool white) or 6500 K (daylight white)
Colour rendering R_a: ≥ 80
For the luminous flux and luminaire efficacy, see the table above

Energy efficiency class of the light source

The device contains a light source in energy efficiency class C (4000 K, 5000 K, 5700 K, 6500 K) or D (2700 K).
(according to the Energy Labelling Regulation for light sources)

Luminous flux decline

at ambient temperature

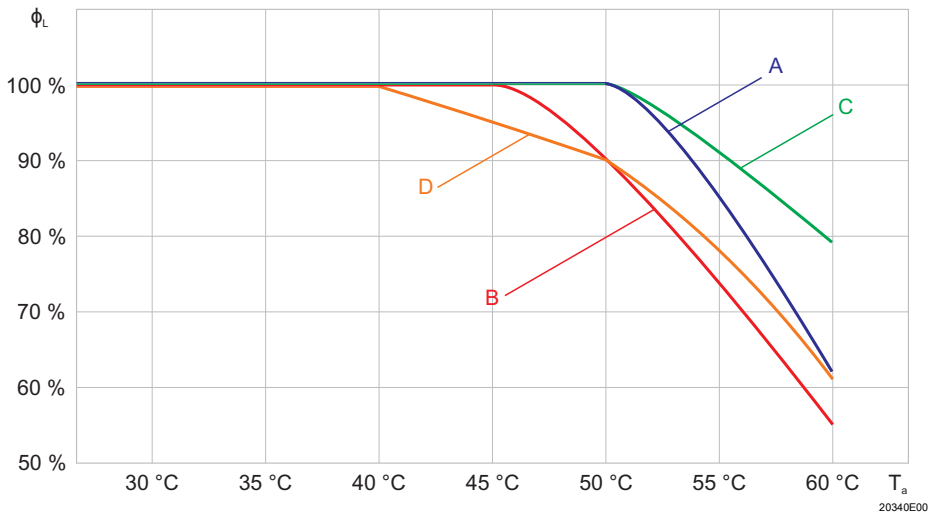

A: Size 2; 230 V, 50 Hz
B: Size 4; 230 V, 50 Hz
C: Size 2; 110 V AC, 60 Hz
D: Size 4; 110 V AC, 60 Hz

EN

Technical data

Ambient conditions

Functional ambient temperature range	without through wiring	-30 to +60 °C (1, 2)
	I_N Through wiring ≤ 10 A	-30 to +55 °C (1, 2)
	I_N Through wiring ≤ 16 A	-30 to +50 °C (1)
	(1) **Rated operating time during emergency light operation** is guaranteed within an ambient temperature range of -5 to +50 °C. This also applies to charging and discharging of the battery. The rated operating time might be reduced if used outside this temperature range. (2) **Battery service life** is guaranteed within an ambient temperature range of -30 to +50 °C according to IEC/EN 60598-2-22.	
Storage	Light fitting: -30 to +60 °C Battery: -20 to +30 °C (max. 85% relative humidity, see chapter 7.2 for recommendation)	

Service life

LED	$L_{90}B_{50}$: 100,000 h L_xB_y At the end of the service life: • Luminous flux declines to "x" percent • up to "y" percent of all luminaires do not reach "x"
LED control gear	C_{10} at 60 °C ≥ 100,000 h C_{10} = failure rate 10%

Mechanical data

Degree of protection according to IEC 60598	
R. STAHL cable entries	IP66/IP67
8162/1 breather	IP64
Impact strength (IK code)	IK10 (IEC 62262)
Material	
Enclosure	Polyester resin, glass fibre reinforced
Enclosure colours	Grey colour, similar to RAL 7035
Translucent cover	Polycarbonate
Seal	Silicone seal, foamed into the translucent cover
Luminaire lock	Central lock for M8 / A/F 13 box spanner; the translucent cover can be swivelled on its hinge

EN

Technical data

Mounting/installation

Cable entries		
Openings	Standard	Connection side, 2 drilled holes for M25 (for loop in/loop out wiring) Output side, 1 drilled hole for M25 (for through wiring of the connection line)
	optional	max. 4 drilled holes for M20, M25, NPSM 1/2" or max. 2 drilled holes for NPT 3/4"
Threaded plate	Standard	2 x plastic M25 x 1.5
	optional	2 x metal M25 x 1.5 or M20 x 1.5 connected by means of PE for metal cable entries Seawater-resistant version on request Attention: cable entries must be ordered separately
Accessories	Standard	Plastic, 2 x M25 x 1.5 cable entries 8161 and 2 x M25 x 1.5 stopping plugs 8290 (included)
	optional	Metal cable glands: M20 x 1.5, M25 x 1.5; earthing of metal cable entries via metal plates (further cable entries possible on request)
Connection	Spring clamp terminals for max. 16 A Standard: 6-pole: L1, L2, L3, L', N, PE with DALI: 8-pole: L1, L2, L3, L', N, PE, D1, D2 Clamping range: 1.5 to 4 mm^2 (finely stranded) 1.5 to 6 mm^2 (solid and finely stranded with core end sleeve) (2 free clamping units per pole available)	
Through wiring	Standard	with
		Luminaires are equipped with internal through wiring. Connection of ingoing and outgoing leads on opposite sides is possible. Terminals: See technical data Wiring cross section of the supply line connection: 2.5 mm^2 for max. 16 A (Observe operating temperature)
	optional	without
		On the connection side, there are 2 M25 x 1.5 bores for cable entries for loop in/loop out wiring of the connection line (ingoing and outgoing lead on one side).
Mounting	Standard	2 x M8 insert nuts in the enclosure
	optional	Mounting grooves in the enclosure for use of mounting and top rails for variable luminaire mounting (variable mounting distances for luminaires Size 2: 320 to 480 mm Size 4: 670 to 930 mm)

EN

Technical data

Control gear

Emergency light operation	In case of power failure the LEDs are supplied by the battery.
Rated operating time	At optimal ambient temperature of the battery:

Battery capacity	Rated operating time	Emergency light output	
		Size 2	Size 4
7 Ah	1.5 h	65%	35%
	3.0 h	35%	20%

Switchover voltage	From mains to battery operation at U < 84 V From battery to mains operation at U > 94 V

Battery set

Version	NiCd battery, gas-tight
Operating voltage	6 V
Capacity	7 Ah
Changing the battery set	When opening the battery enclosure, the connection between the battery and the control gear is disconnected by means of a switch. The battery set can be replaced after disconnecting a plug-in contact.

Optional

Interface	DALI (according to IEC 62386): • Device type 1 (emergency lighting with individual battery) • Device type 6 (LED driver)
Breather	Breather 8162/1 from R.STAHL Schaltgeräte GmbH The breather guarantees compliance with degree of protection IP64 in all mounting positions. The breather may not be used in atmospheres with corrosive gases.

For further technical data, see r-stahl.com.

EN

6 Project engineering

6.1 Power supply operation

6.1.1 Stand-by switching

- The luminaire is switched off.

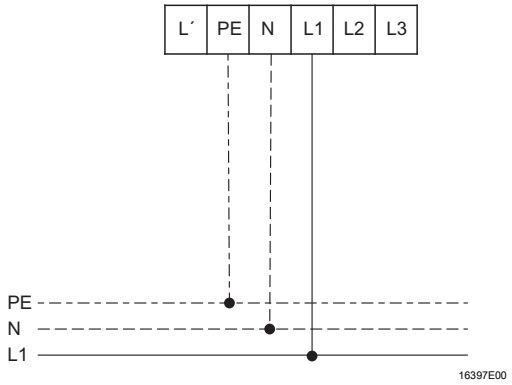

6.1.2 Continuous mode

- The luminaire is switched on.

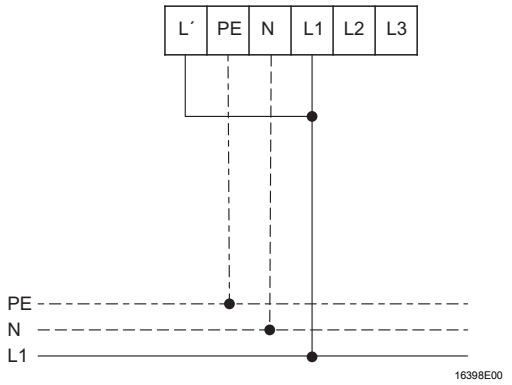

6.1.3 Switching with normal lighting

- The light fitting is switched with the normal lighting.

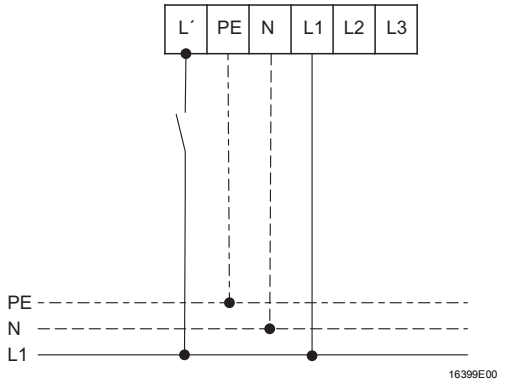

EN

6.1.4 Control with DALI

- The luminaire is switched using a DALI control.

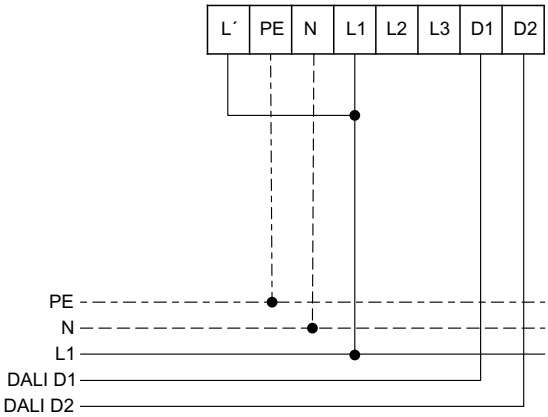

22340E00

EN

6.2 Emergency light blocking connection variants (remote switch function)

The remote switch is directly connected to the control gear (see chapter 10.2).

The following connection variants are possible:

Point-to-point connection

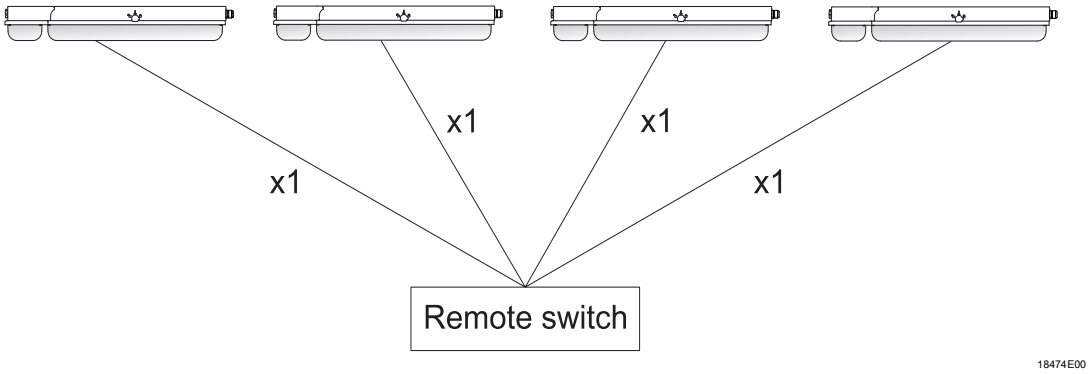

Linear connection

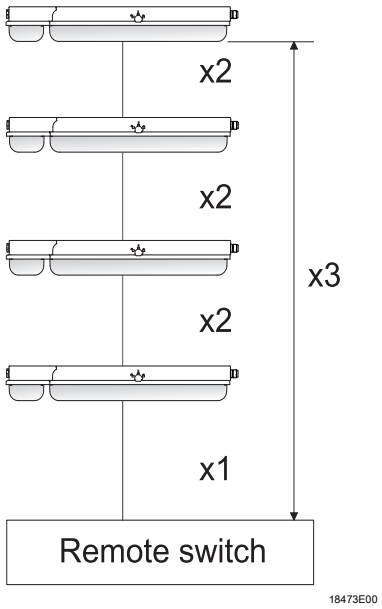

The following conductor specifications must be observed during connection:

	Point-to-point connection	Linear connection
maximum conductor length		
x 1	500 m	100 m
x 2		50 m
x 3		500 m
maximum number of luminaires	50	30

EN

7 Transport and storage

7.1 General information

- Transport and store the device only in the original packaging.
- Store the device in a dry place (no condensation) free of vibrations.
- Do not drop the device.

7.2 Batteries

- Do not transport together with other materials.
- Do not transport in an explosive dust atmosphere.
- Handle with care.
- Store protected from fire, sources of dust, harmful gases and liquids.
- Store in a dry and cool location.

NOTICE
Risk of deep battery discharge due to exceeded storage! Non-compliance can result in material damage! • The battery should be charged within 26 weeks from date of production by means of operating the luminaire.

Recommendation:

- Store the battery at an ambient temperature of +5 to +25 °C and a relative humidity of 65 ± 5%. Outside of this temperature range, the storage time is shortened to up to a month.

EN

8 Mounting and installation

DANGER

Explosion hazard due to incorrect installation of the device!
Non-compliance results in severe or fatal injuries.

- Carry out installation strictly according to the instructions and national safety and accident prevention regulations to maintain explosion protection.
- Select and install the electrical device so that explosion protection is not affected due to external influences (see IEC/EN 60079-14).
- The device must only be installed by trained qualified personnel who are familiar with the relevant standards.

NOTICE

Malfunction or device damage caused by condensation.
Non-compliance may lead to material damage!

- Operate the luminaire continuously or periodically over extended periods of time.
- Avoid thermal bridges, use suitable installation accessories.

8.1 Dimensions/fastening dimensions

Dimensional drawings (all dimensions in mm [inch]) – Subject to change

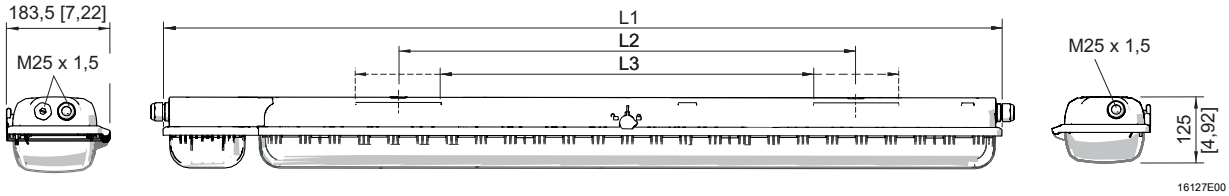

Dimensions	Luminaire	
	Size 2	Size 4
L1	857 [33.74]	1467 [57.76]
L2 [1)]	400 [15.75]	800 [31.50]
L3 [2)]	320 to 480 [12.60 to 18.90]	670 to 930 [26.38 to 36.61]

[1)] fixed mounting distance

[2)] variable mounting distance

EXLUX 6409/4

EN

Dimensional drawings for assembly parts and accessories (all dimensions in mm [inch]) – Subject to change

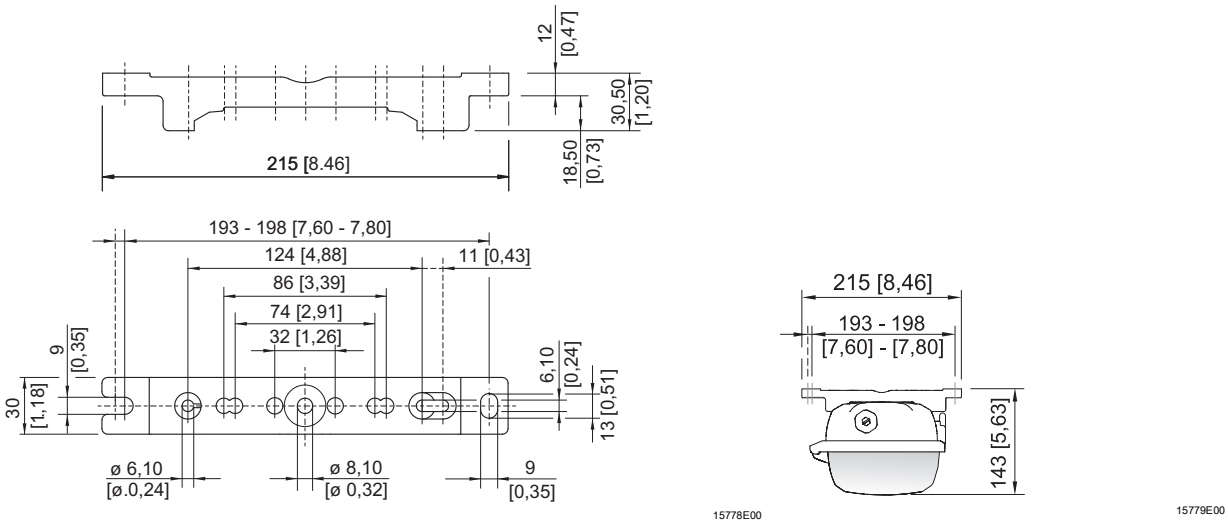

Mounting rail

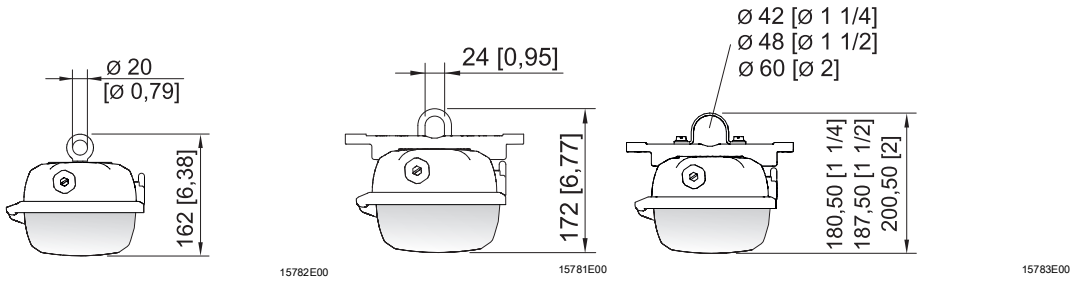

Ring bolt installed in insert nut of the luminaire

Mounting bracket fitted in mounting rail

Pipe clamp installed in mounting rail

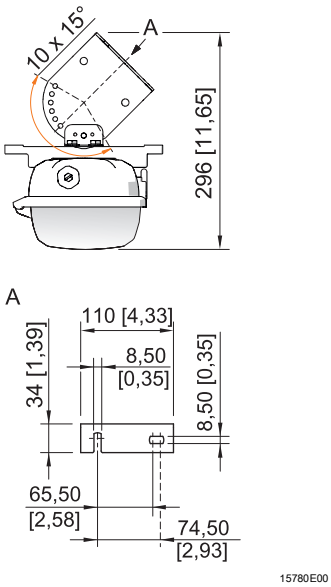

Wall mounting bracket installed in mounting rail

EN

Dimensional drawings for assembly parts and accessories (all dimensions in mm [inch]) – Subject to change

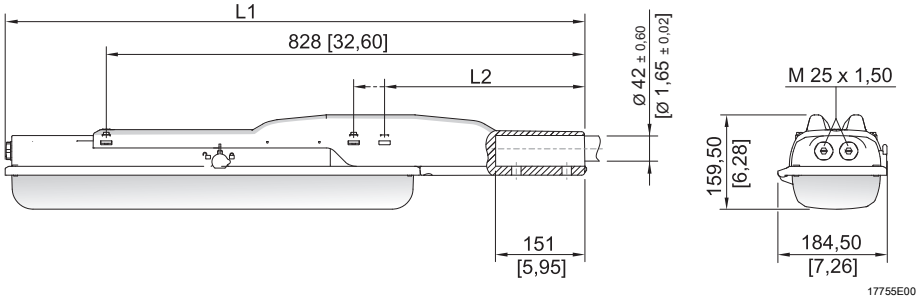

Dimensions	Luminaire	
	Size 2	Size 4
L1	1135 [44.69]	1744 [68.66]
L2	390 [15.35]	338 [13.31]

Linear luminaire EXLUX with pole mounting sleeve

8.2 Removing protective foil

As standard, the luminaire is generally delivered with protective foil on the translucent cover. However, in some cases, it can be delivered without protective foil.

	DANGER
EX	Explosion hazard due to electrostatic discharge! Non-compliance results in severe or fatal injuries. • Only remove protective foil in safe areas.

- If protective foil is present:
  Remove the protective foil before commissioning.

EN

8.3 Mounting/dismounting, operating position

	DANGER
EX	Explosion hazard due to electrostatic discharge! Non-compliance results in severe or fatal injuries. Do not use the device in strong charge-generating environments! The following processes/activities should be avoided: • Accidental friction • Particle flows

	DANGER
EX	Explosion hazard due to impermissible heating! Non-compliance results in severe or fatal injuries. • Avoid external heat sources – comply with the ambient temperature range (risk of change of temperature class or change of maximum permissible surface temperature). • Do not exceed the maximum ambient temperature due to external heat sources (premature failure of equipment).

i	The luminaire is suitable for wall and ceiling mounting. In event of wall mounting in outdoor areas, avoid installation with central lock at top. The mounting position with light emission upwards is prohibited in outdoor areas.

Suspension at fixed mounting points

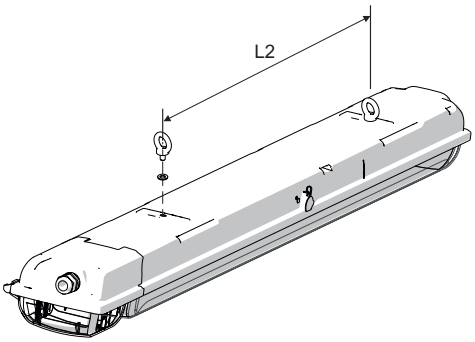

16324E00

Size	L2 mm [inch]
2	400 [15.75]
4	800 [31.50]

max. screw-in depth 10 mm [0.39]

EN

Suspension on movable assembly parts

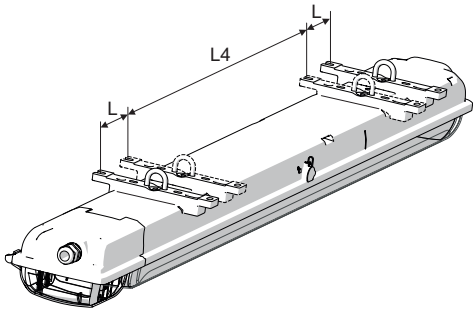

16325E00

Mounting bracket

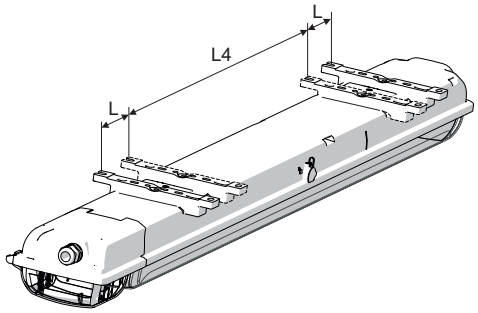

16326E00

Top rail

Size	L4 mm [inch]	L mm [inch]
2	320 [12.60]	80 [3.15]
4	670 [26.38]	130 [5.12]

Lateral mounting pockets for variable points of suspension.

i	When mounting the luminaire using top rails, ensure that the mounting surface is flat. Otherwise, the enclosure might be mounted in a warped/twisted way. The result is leakage of the luminaire and difficulties in replacing the translucent cover.

Pole mounting using pole mounting sleeve

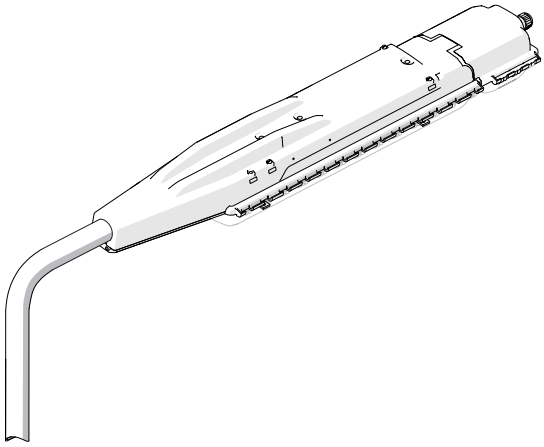

18483E00

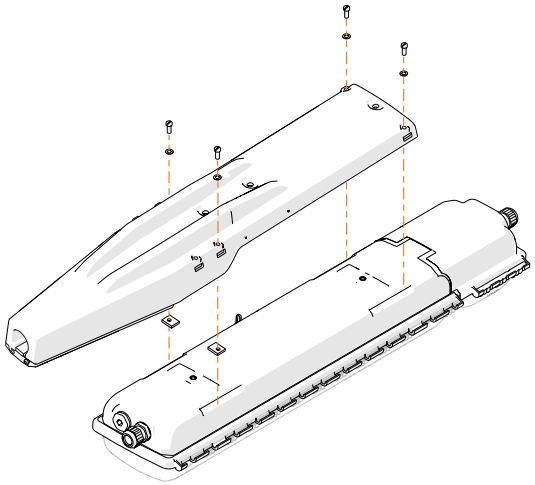

18482E00

EN

Pole suspension
Pole mounting using pipe clamps

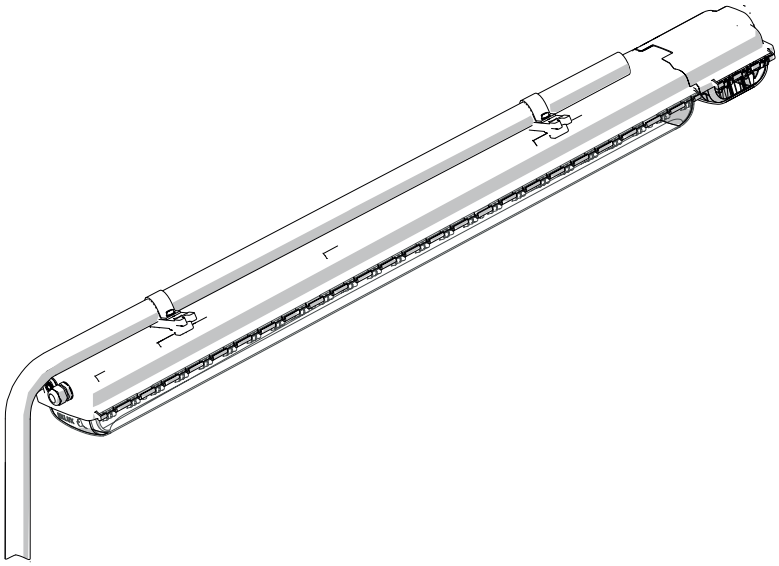

16327E00

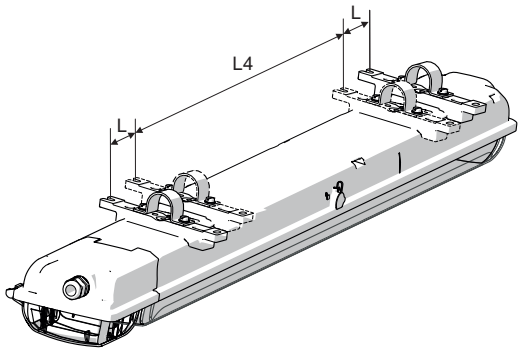

16328E00

Size	L4 mm [inch]	L mm [inch]
2	320 [12.60]	80 [3.15]
4	670 [26.38]	130 [5.12]

i	For pipe clamp mounting, use the solution from R. STAHL Schaltgeräte GmbH with integrated mounting rail, providing reliable and stable four-point fixing! In case of point suspension using pipe clamps, R. STAHL Schaltgeräte GmbH does not guarantee the strength and tightness of the luminaire!

EN

Wall bracket mounting

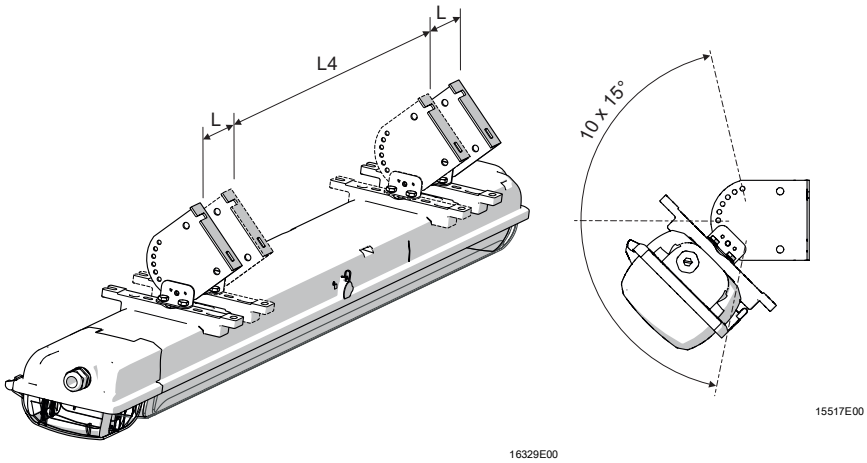

Size	L4 mm [inch]	L mm [inch]
2	320 [12.60]	80 [3.15]
4	670 [26.38]	130 [5.12]

8.4 Installation

8.4.1 Opening and closing the enclosure

	DANGER
	Risk of electric shock due to improper opening! Non-compliance results in severe or fatal injuries. • Open luminaires without switches only in de-energised state (see information plate on the lock)!

	Recommendation Open and close the luminaire using the box spanner from R. STAHL Schaltgeräte GmbH.

EN

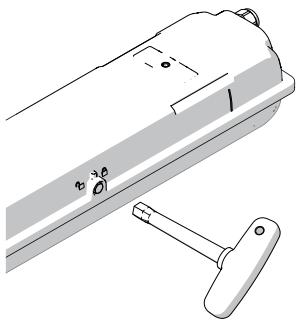

15448E00

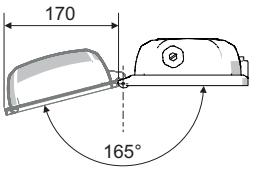

15451E00

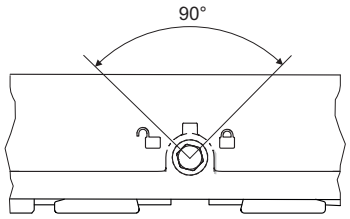

15436E00

- Remove the closing cap of the central lock.
- Turn the central lock using a box spanner M8, spanner size 13, by 90° to the left as far as it will go.
- Swivel down the translucent cover.
- Proceed in reverse order to close.
- The seal of the translucent cover must lie correctly on the sealing edge.
- Push the closing cap onto the central lock opening (protection against dirt).

Observe the following during mounting and dismounting:

- Version without switch: Disconnect the luminaire from the power supply, secure it against being switched on again and open the battery case in order to disconnect from the battery voltage.
- Do not use force when opening or closing the enclosure!

Central lock

- Version with switches: The luminaire is positively disconnected from the power supply by actuating the central lock.
- In the open end position and with the translucent cover swivelled down, the anti-pumping device prevents the central lock from being actuated.

Opening and closing the reflector plate

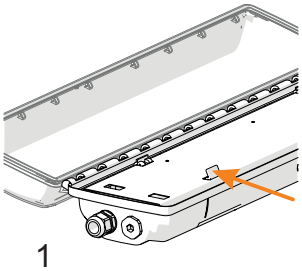

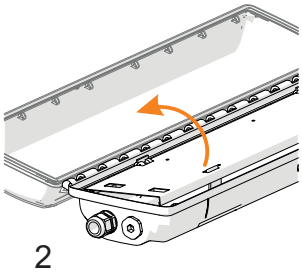

15512E00

Opening:

- Open the reflector plate by pressing down on the safety latch (1).
- Swivel down the reflector plate (2).

Closing:

- Flip up the reflector plate and snap it into place.

EN

Opening and closing the battery case

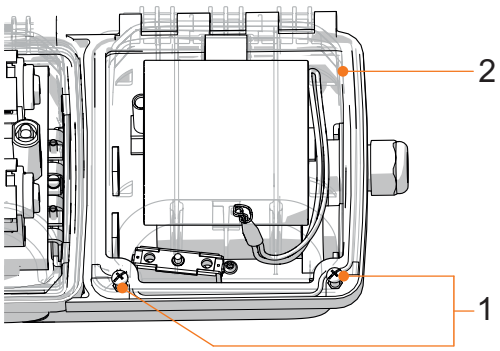

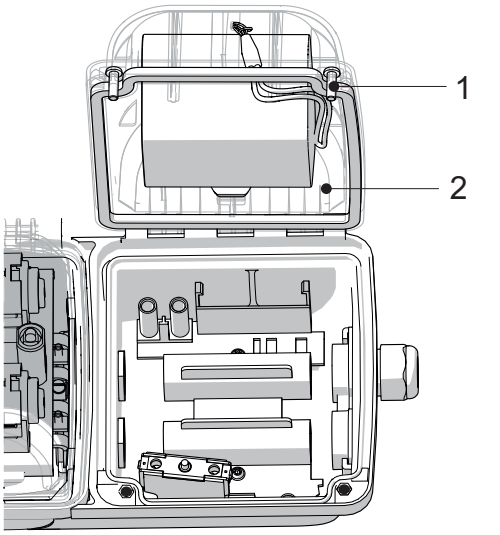

Opening:

- Loosen the screws (1) (cross-recessed H2).
- Open the battery cover (2).

Closing:

- Close the battery cover (2).
- Tighten the screws (1) (cross-recessed H2) firmly (2 Nm).

EN

8.4.2 Electrical connections

Mains connection

Observe the maximum clamping possibility of the connection terminals (see chapter "Technical data").

Observe the following when connecting to the mains connection:

- Clamping must be carried out precisely!
- Do not clamp any part of the conductor insulation!
- Do not mix up the conductors.
- Observe the technical regulations when connecting the conductor.
- Clamp the conductor firmly.
- Phase L1 must be directly connected to the mains. It functions as the charging phase of the battery.

NOTICE
Danger due to wrong connection. Malfunction • Phases L' and L1 must be connected in phase.

Connection terminals

Clamping range:
1.5 to 4 mm^2 (finely stranded)
1.5 to 6 mm^2 (solid and finely stranded with core end sleeve)
(2 free clamping units per pole available)
Stripping length:
10 to 12 mm

Standard:

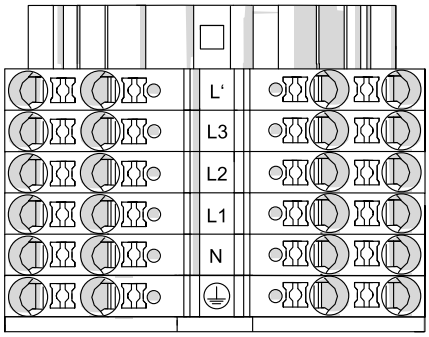

20294E00

L'	= switched phase
L1	= charging phase
L2, L3	= phase
N	= neutral conductor
⏚	= protective conductor

EN

with DALI connection:

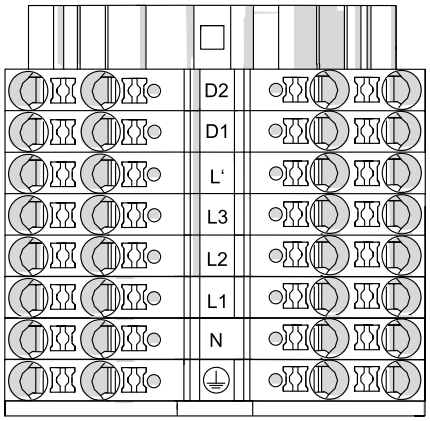

20302E00

D1, D2	= DALI connection
L'	= switched phase
L1	= charging phase
L2, L3	= phase
N	= neutral conductor
⏚	= protective conductor

Through wiring of the mains supply connection

i	Through wiring with 2.5 mm^2 Cross section for max. 16 A.

Connecting the remote switch to the control gear

Connecting the remote switch to the potential-free contact "Remote switch" on the control gear.

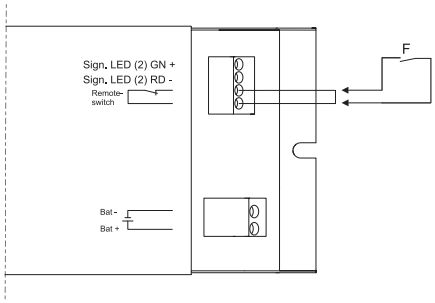

19192E00

Clamping range:
1.5 mm^2 solid, finely stranded and extra finely stranded
Stripping length:
8.5 to 9.5 mm

EN

8.4.3 Cable entries, stopping plugs and breathers

The standard luminaire is delivered with 3 entries, 2 cable entries and 2 stopping plugs.

Tightening torques for components from R. STAHL Schaltgeräte GmbH

Luminaires with installed cable entries and stopping plugs from R. STAHL Schaltgeräte GmbH must be tightened using the following values:

		Tightening torque	
		Connection thread	Pressure screw
Cable entry 8161	M20 x 1.5	2.3 Nm	1.5 Nm
	M25 x 1.5	3.0 Nm	2.0 Nm
Stopping plug 8290	M20 x 1.5	1.0 Nm	–
	M25 x 1.5	1.5 Nm	–
Breather 8162/1	M25	3.0 Nm	–

Cable entry or breather made of metal

DANGER

Explosion hazard due to unearthed external metal parts!
Non-compliance results in severe or fatal injuries.

- Contact threaded pins for a combination of a metal insertion plate with metal cable entries or breather (see figure).

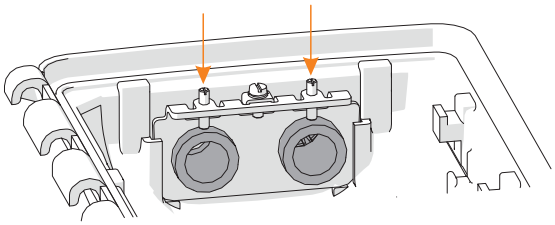

23080E00

Luminaires with cable entries and stopping plugs which are not supplied by R. STAHL Schaltgeräte GmbH

DANGER

Explosion hazard due to impermissible cable entries and stopping plugs!
Non-compliance results in severe or fatal injuries.

- Use cable entries and stopping plugs which have been separately tested according to Directive 2014/34/EU (ATEX) or IECEx (CoC), which comply with the standard version stated in the certificate of the luminaire and which have been certified.

EN

Please observe the following:
- the required dust resistance!
- the required type of protection!
- the required temperature resistance!
- the IP degree of protection according to the label on the device!
- the operating instructions of the cable entries and stopping plugs!
- the required tightening torques!
- the area for the permissible conductor diameter!
- insert the metal cable entries and/or stopping plugs into the PE!

8.4.4 Lighting system insulation test

A DC voltage insulation test in electrical circuits is permissible up to 500 V DC under the following conditions:

Test location/condition	Circuit diagram
1. Between neutral conductor and protective conductor	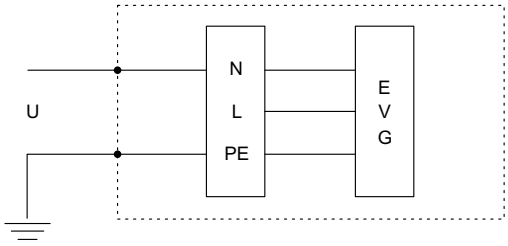
2. Between phase and protective conductor	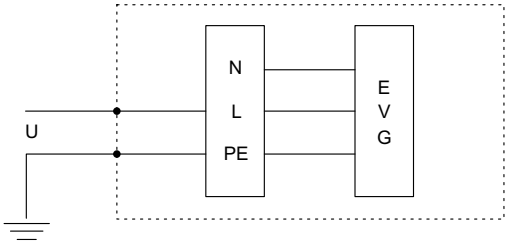
3. Between phase and neutral conductor For a measurement between phase and the neutral conductor, the control gear must be disconnected from the mains power! **NOTICE!** **Destruction of the device and/or electrical components if the disconnector is missing!** Non-compliance may lead to material damage! ▸ Only disconnect the device from the mains power using an internal switch before the insulation test.	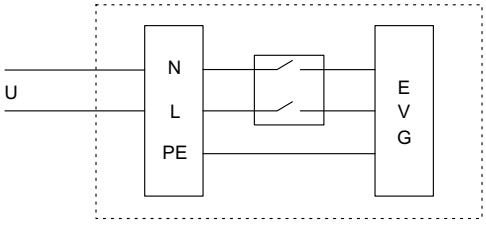

EN

9 Commissioning

DANGER

Explosion hazard due to incorrect installation!
Non-compliance results in severe or fatal injuries.
- Check the device for proper installation before commissioning.
- Comply with national regulations.

NOTICE

Malfunction or device damage caused by condensation.
Non-compliance may lead to material damage!
- Operate the luminaire continuously or periodically over extended periods of time.
- Avoid thermal bridges, use suitable installation accessories.

Before commissioning, ensure the following:
- Check the mounting and installation.
- Check the device for damage.
- Remove any foreign objects.
- If necessary, clean the connection chamber.
- Monitor whether the electrical lines have been inserted correctly.
- Monitor whether all screws and nuts have been tightened securely.
- Monitor whether all drilled holes are closed.
- Monitor whether all cable entries and stopping plugs have been tightened securely.
- Monitor whether all conductors have been clamped firmly.
- Monitor whether the line voltage and the rated operational voltage are consistent.
- Monitor whether the permissible conductor diameters for the corresponding cable entries have been used.
- Monitor whether the device is closed according to regulations.
- Monitor whether the battery is connected.
- If necessary, remove transport protection (foam cushion).
- Monitor whether the LED assembly and the diffuser are clean.
- Check that there is no protective foil on the translucent cover.

EN

10 Operation

10.1 Operating modes

Power supply operation:

Stand-by switching	The luminaire is switched off regardless of normal lighting.
Continuous mode	The luminaire is switched on regardless of normal lighting.
Switching with normal lighting	The light fitting is switched with the normal lighting.

Emergency light operation:
In the event of a power failure, the luminaire switches to emergency light operation. The luminaire is switched on for the selected rated operating time regardless of the operating mode.

Rated operating time
is 1.5 h or 3.0 h within the optimum temperature range depending on the variant (see "Technical data" chapter).

EN

10.2 Emergency light blocking (remote switch function)

For emergency light blocking, a remote switch can be connected via a remote switch on the control gear.

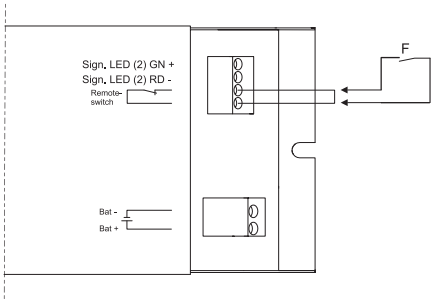

19192E00

	Remote switch is closed	Remote switch is opened	
		Logic 1 (see figure below)	Logic 2 (see figure below)
Duration		≥ 5 s	1 to 5 s (pulse)
Power supply operation	Switching on the luminaire depending on operating mode	Switching on the luminaire depending on operating mode	
Power failure	Emergency light function	No emergency light function	No emergency light function Notice: The existing emergency light blocking is automatically reset after a power failure.

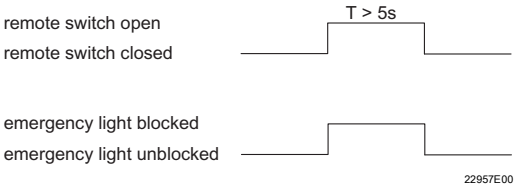

Logic 1

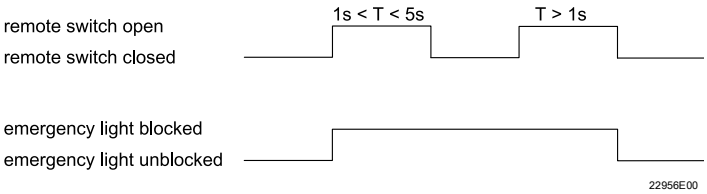

Logic 2

EN

10.3 Functional and rated operating time test

To carry out the test, the following prerequisites must be fulfilled:
- The time interval has expired
- Power supply operation was active for at least 1 hour
- The remote switch is closed

The test result is shown on the LED indicator.
During a test the luminaire is switched on.

Functional test
- starts within 24 hours after commissioning
- is carried out every 7 days
- takes 1 minute
- checks the function of the LEDs and the battery

Rated operating time test
- starts within 44 days after commissioning
- is carried out once a year
- checks the function and the operating time of the luminaire during emergency light mode
- is repeated after 14 days if the rated operating time test is faulty

10.4 Displays

When connecting to the power supply
Initialisation for 10 seconds

Seconds	Description	LED indicator
0 to 2	Function test green LED	–
2 to 4	Function test red LED	–
4 to 10	Status of rated operating time test	Green LED flashes – rated operating time test active
		Green LED off – rated operating time test not active

Then, the LED indicator switches to operating mode.

During power supply operation
Blinking: 1 second on, 1 second off
Flashing: 0.25 seconds on, 0.75 seconds off

LED indicator	Description	Meaning
Green	Luminaire is operational	–
Blinking green	Luminaire is operational	Functional or rated operating time test activated
Red	Error	Battery is defective or electrical circuit to battery is interrupted
Blinking red	Error	Last functional and/or rated operating time test defective
Flashing red	Error	LEDs defective
Blinking green/red	Luminaire is operational, no emergency light operation	Emergency light operation is deactivated by remote switch
Flashing green/red	Luminaire is operational	Reset signal detected

During emergency light operation
The LED indicator is switched off.

10.5 Troubleshooting

Error	Cause of error	Troubleshooting
Luminaire is not lighting up	The LEDs are defective.	Replace the mounting plate including LEDs and the control gear.
	The control gear is defective.	Replace the control gear.
	The switch is defective.	Replace the switch.
Red LED indicator	The battery is defective.	Replace the battery.
	The switch in the battery box is defective.	Replace the switch.
	The switch in the luminaire is defective.	Replace the switch.
LED indicator blinking red	The battery capacity is too low.	Replace the battery.
	The LEDs are defective.	Replace the mounting plate including LEDs and the control gear.

The LED indicator lights up green after troubleshooting.

If the error cannot be eliminated using the specified procedures:
- Contact R. STAHL Schaltgeräte GmbH.

For rapid processing, have the following information ready:
- Type and serial number of the device
- Purchase information
- Error description
- Intended purpose (especially input/output circuit)

EN

11 Maintenance, overhaul, repair

	CAUTION
	Risk of electric shock or malfunction of the device due to unauthorised work! Non-compliance can result in minor injuries! • Switch off the voltage supply before working on the device. • Work performed on the device must only be carried out by authorised and appropriately trained qualified electricians.

11.1 Maintenance and overhaul

- Consult the relevant national regulations to determine the type and extent of inspections.
- Tailor inspection intervals to the operating conditions.
- Perform maintenance and repair work in accordance with IEC 60079-17 and IEC 60079-19.

	Observe the relevant national regulations in the country of use.

During maintenance/overhaul of the device, the following points must be checked:

- Whether the clamping screws holding the electrical lines fit securely
- Whether the device has cracks or other visible signs of damage
- Whether the seal shows signs of ageing or damage (completely replace enclosure components with damaged foamed seal)
- Whether the device is clean inside and out
- Whether the permissible temperatures are complied with (according to EN 60079)
- Whether the cable entry is intact and securely tightened
- Whether the cables and electrical lines show signs of ageing and damage
- Whether the device is used as intended and functions properly

11.1.1 Replacing the luminaire cover

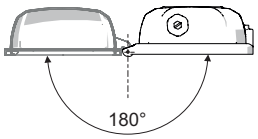 15437E00	• Open the luminaire. • Swivel the translucent cover backwards by 180°. • Lift the translucent cover to detach it from the hinge. • Insert the new translucent cover into the hinge. • All hinges must engage correctly. • Close the luminaire. • Observe safety notes!

EN

11.1.2 Replacing the battery

	DANGER
	Explosion hazard due to explosive dust atmosphere! Non-compliance results in severe or fatal injuries. • Do not replace or transport the battery in an explosive dust atmosphere.

	WARNING
	Danger due to sparking! Explosion protection jeopardised! • Transport the battery cover with installed battery securely on your wrist. • To do so, put the strap of the battery case around your wrist.

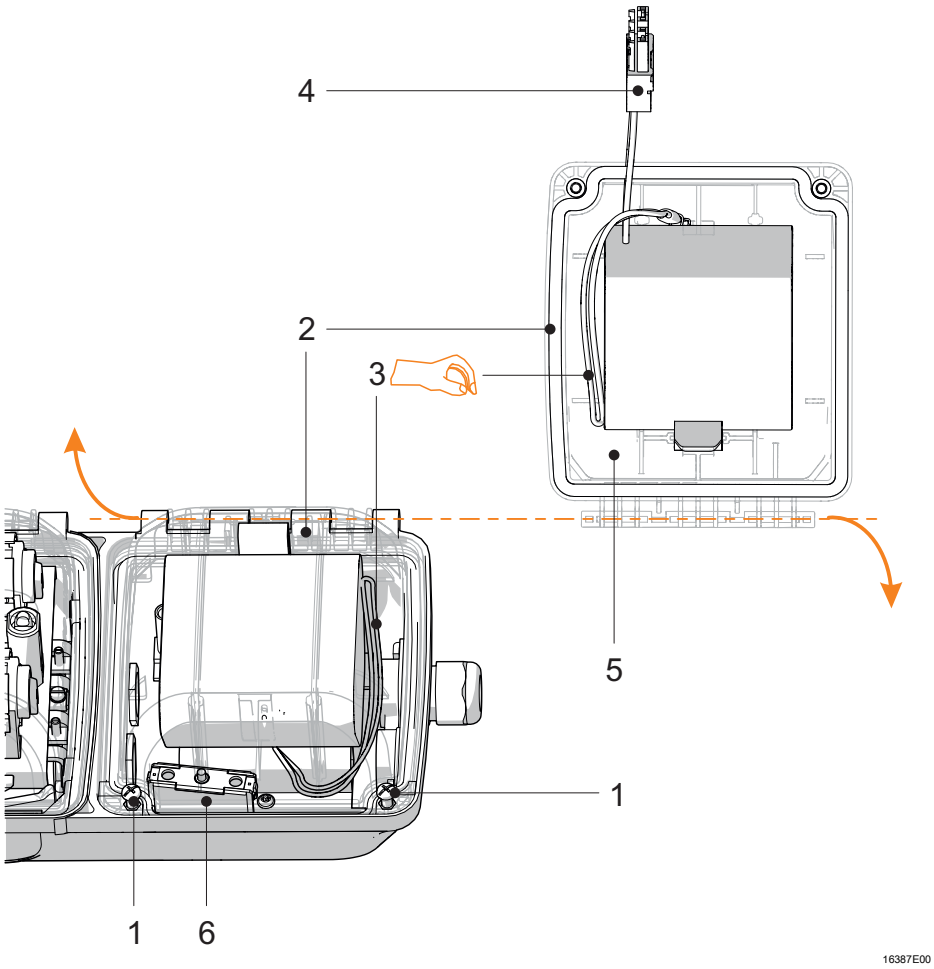

1	Screws	4	Battery plug
2	Battery cover	5	Battery
3	Strap	6	Switch

EN

- Loosen the screws (1) (cross-recessed H2) in the battery cover (2).
- Open the battery case.
- The switch (6) disconnects the battery circuit.
- Secure the battery cover with installed battery to your wrist using the strap (3).

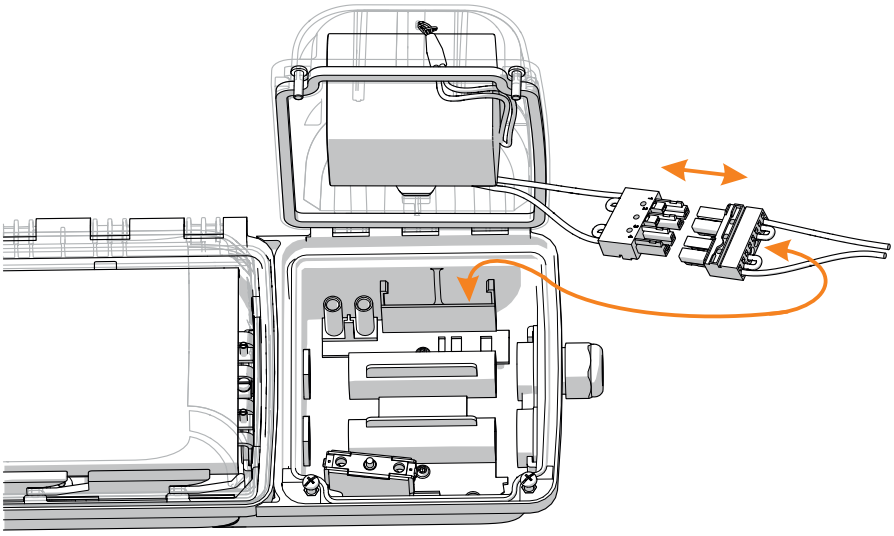

16406E00

- Remove the battery plug from the chamber.
- Disconnect the battery plug (4).
- Take off the battery cover with installed battery (5).
- Attach the new battery cover with installed battery (5).
- Connect the battery plug (4).
- Remove the strap (3) from your wrist and store it in the battery case.

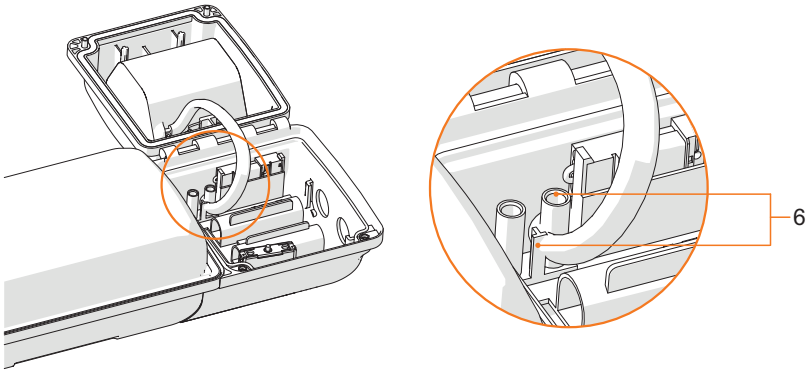

21447E00

- Close the battery case. Fix battery conductors in place to protect them against getting caught between the plastic domes (6).
- Tighten the screws (1) (cross-recessed H2) firmly (2 Nm).

EN

Resetting the error indication "blinking red" after replacing the battery

i	The error indication "blinking red" remains active after successfully replacing the battery. **Deactivation:** Automatic: • After replacing the battery, a rated operating time test is carried out automatically within 14 days. • The error will be reset once this test has been passed successfully. Manual (not for variants with DALI): • The line voltage must be switched on. • Actuate the switch in the battery case for 5 seconds. • Release the switch. • Actuate the switch twice within 10 seconds for a duration of 2 seconds. • The LED indicator will show that the error has been reset by flashing red/green lights for 5 seconds. • The error is reset. • Close the battery case.

11.2 Repair

EX	**DANGER**
	Explosion hazard due to improper repair! Non-compliance results in severe or fatal injuries. • Repair work on the devices must be performed only by R. STAHL Schaltgeräte GmbH.

11.3 Returning the device

- Only return or package the devices after consulting R. STAHL!
  Contact the responsible representative from R. STAHL.

R. STAHL's customer service is available to handle returns if repair or service is required.

- Contact customer service personally.

or

- Go to the r-stahl.com website.
- Under "Support" > "RMA" > select "RMA-REQUEST".
- Fill out the form and send it.
  You will automatically receive an RMA form via email. Please print this file off.
- Send the device along with the RMA form in the packaging to
  R. STAHL Schaltgeräte GmbH (refer to chapter 1.1 for the address).

EN

12 Cleaning

- Devices located in hazardous areas may only be cleaned with a damp cloth to avoid electrostatic charge.
- When cleaning with a damp cloth, use water or mild, non-abrasive, non-scratching cleaning agents.
- Do not use abrasive cleaning agents or solvents.
- Never clean the device with a strong water jet, e.g. a pressure washer.

13 Disposal

- Observe national, local and statutory regulations regarding disposal.
- Separate materials for recycling.
- Ensure environmentally friendly disposal of all components according to statutory regulations.
- Removal of components at the end of their service life:
  - Remove and open luminaires according to the operating instructions.
  - Disconnect cables from the LED PCB and control gear.
  - Control gear: Loosen the mounting screws and remove the device.
  - LED PCB: Push the barbs on the underside together using suitable pliers and remove the PCB upwards.

	CAUTION
	Danger to people and the environment if the surrounding environment is contaminated. Non-compliance can result in minor injuries and environmental damage. Batteries • must be collected separately • must be disposed of in a controlled manner • must not be disposed of in domestic waste • must be returned to public collection points or the supplier

EN

14 Accessories and spare parts

NOTICE

Malfunction or damage to the device due to the use of non-original components.
Non-compliance may lead to material damage!

- Use only original accessories and spare parts from R. STAHL Schaltgeräte GmbH.

Designation	Figure	Description	Item no.	Weight kg
Battery set	 16332E00	Battery cover with installed battery. NiCd battery, gas-tight; 7 Ah/6 V	**223532**	1.195

i	For accessories and spare parts, see the data sheet on our website r-stahl.com.

EU-Konformitätserklärung
EU Declaration of Conformity
Déclaration de Conformité UE

STAHL

R. STAHL Schaltgeräte GmbH • Am Bahnhof 30 • 74638 Waldenburg, Germany

erklärt in alleiniger Verantwortung, *declares in its sole responsibility, déclare sous sa seule responsabilité,*

dass das Produkt: *that the product:* *que le produit:*	**LED Notlichtleuchte** *LED Emergency Luminaire* *LED Luminaire de secours*
Typ(en), *type(s), type(s):*	**6409/4...**

mit den Anforderungen der folgenden Richtlinien und Normen übereinstimmt.
is in conformity with the requirements of the following directives and standards.
est conforme aux exigences des directives et des normes suivantes.

Richtlinie(n) / *Directive(s) / Directive(s)*	**Norm(en)** / *Standard(s) / Norme(s)*
2014/34/EU **ATEX-Richtlinie** *2014/34/EU ATEX Directive* *2014/34/UE Directive ATEX*	EN IEC 60079-0:2018 EN 60079-1:2014 EN 60079-7:2015 EN 60079-18:2015 EN 60079-28:2015 EN 60079-31:2014
Kennzeichnung, *marking, marquage:*	Ex **II 3 G Ex db ec IIC T4 Gc** **II 3 G Ex db ec mb IIC T4 Gc** **II 3 D Ex tc IIIC T100 °C Dc** **II 2 D Ex tb op is IIIC T100 °C Db** CE 0158
EU-Baumusterprüfbescheinigung: *EU Type Examination Certificate:* *Attestation d'examen UE de type:*	**IBExU 16 ATEX 1233** (IBExU Institut für Sicherheitstechnik GmbH Fuchsmühlenweg 7, 09599 Freiberg, Germany)
Produktnormen nach Niederspannungsrichtlinie: *Product standards according to Low Voltage Directive:* *Normes des produit pour la Directive Basse Tension:*	EN 60598-1:2015/A1:2018 EN 60598-2-22:2014/AC:2015 EN 62471:2008
2014/30/EU **EMV-Richtlinie** *2014/30/EU EMC Directive* *2014/30/UE Directive CEM*	EN 61547:2009 EN 55015:2013 + A1:2015 EN 61000-3-2:2014 EN 61000-3-3:2013
2011/65/EU **RoHS-Richtlinie** *2011/65/EU RoHS Directive* *2011/65/UE Directive RoHS*	EN 50581:2012

Waldenburg, 2019-09-02	i.V.	i.V.
Ort und Datum *Place and date* *Lieu et date*	**Dr. A. Kaufmann** ***Senior Vice President Marketing & Innovation*** *Vice-président directeur Marketing & Innovation*	**J. Freimüller** ***Vice President Quality Management*** *Directeur Assurance de Qualité*

UK Declaration of Conformity
UK-Konformitätserklärung

STAHL

R. STAHL Schaltgeräte GmbH • Am Bahnhof 30 • 74638 Waldenburg, Germany
represented locally by, *lokal vertreten durch*
R. STAHL LTD. • 2nd Floor, Bromwich Court, Gorsey Lane, Coleshill • Birmingham B46 1JU, UK
declares in its sole responsibility, *erklärt in alleiniger Verantwortung,*

that the product: *dass das Produkt:*	**LED Emergency Luminaire** *LED-Notlichteuchte*
Type(s), *Typ(en):*	**6409/4.**

is in conformity with the requirements of the following regulations and standards.
mit den Anforderungen der folgenden Verordnungen und Normen übereinstimmt.

Regulation(s) / *Verordnung(en)*	**Standard(s)** / *Norm(en)*
S.I. 2016/1107 Equipment and Protective Systems Intended for Use in Potentially Explosive Atmospheres Regulations *S.I. 2016/1107 Verordnung für Geräte und Schutzsysteme zur bestimmungsgemäßen Verwendung in explosionsgefährdeten Bereichen*	EN IEC 60079-0:2018 EN 60079-1:2014 EN IEC 60079-7:2015 + A1: 2018 EN 60079-18:2015 + A1:2017 EN 60079-28:2015 EN 60079-31:2014
Marking, *Kennzeichnung:*	**II 3G Ex db ec IIC T4 Gc** **II 3G Ex db ec mb IIC T4 Gc** **II 3D Ex tc IIIC T100 °C Dc** **II 2D Ex tb op is IIIC T100 °C Db** **UK CA 8505**
UK Type Examination Certificate: *UK-Baumusterprüfbescheinigung:*	**CML 21UKEX1561** (Eurofins E&E CML Limited, Newport Business Park, New Port Road, Ellesmere Port, Cheshire, CH65 4LZ, UK, AB2503)
Product standards according to S.I. 2016/1101 Electrical Equipment (Safety) Regulation *Produktnormen nach S.I. 2016/1101 (Sicherheits-) Verordnung für elektronische Geräte*	EN 60598-1:2015 + A1:2018 EN 60598-2-22:2022 EN 62471:2008
S.I. 2016/1091 EMC Regulations *S.I. 2016/1091 EMV-Verordnung*	EN 61547:2009 EN IEC 55015:2019 + A11:2020 EN 61000-3-2:2014 EN 61000-3-3: 2013
S.I. 2012/3032 RoHS Regulations *S.I. 2012/3032 RoHS-Verordnung*	EN IEC 63000:2018

Waldenburg, 2023-10-25	i.V.	i.V.
Place and date *Ort und Datum*	**S. Holtz** **Head of R&D - BU Lighting & Signalling** *Leiter Entwicklung Leuchten und Signalgerät*	**D. Groth** **Director Quality Management Systems** *Leiter Qualitätsmanagementsysteme*