Operating instructions

Additional languages r-stahl.com

EN

Floodlight LED

Series 6125

STAHL

EN

Contents

1 General Information 3
1.1 Manufacturer 3
1.2 Information regarding the operating instructions 3
1.3 Further documents 3
1.4 Conformity with standards and regulations 3
2 Explanation of the symbols 4
2.1 Symbols in these operating instructions 4
2.2 Warning notes 4
2.3 Symbols on the device 5
3 Safety notes 5
3.1 Operating instructions storage 5
3.2 Safe use 5
3.3 Intended Use 6
3.4 Modifications and alterations 6
4 Function and device design 6
4.1 Function 6
4.2 Device design 7
5 Technical data 8
6 Transport and storage 11
7 Mounting and installation 11
7.1 Dimensions / fastening dimensions 12
7.2 Mounting / dismounting, operating position 13
7.3 Installation 14
8 Commissioning 17
9 Maintenance, Overhaul, Repair 18
9.1 Maintenance 18
9.2 Repair 19
9.3 Returning the device 19
10 Cleaning 19
11 Disposal 20
12 Accessories and Spare parts 20

EN

1 General Information

1.1 Manufacturer

R. STAHL Schaltgeräte GmbH
Am Bahnhof 30
74638 Waldenburg
Germany

Phone: +49 7942 943-0
Fax: +49 7942 943-4333
Internet: r-stahl.com
E-mail: info@r-stahl.com

R. STAHL (P) LTD., Plot No. - 5
Malrosapuram Road, Sengundram Indl. Area
Singaperumal Koil, Kancheepuram Dist.,
Tamil Nadu – 603 204, INDIA

Phone: +91 44-30 600 600
Fax: +91 44-30 600 700
Internet: rstahl.net
E-mail: sales@rstahl.net

1.2 Information regarding the operating instructions

ID-No.: 251652 / 612560300010
Publication Code: 2020-04-16·BA00·III·en·06

The original instructions are the English edition.
They are legally binding in all legal affairs.

1.3 Further documents

- Data sheet

For documents in additional languages, see r-stahl.com.

1.4 Conformity with standards and regulations

See certificates and EU Declaration of Conformity: r-stahl.com.
The device has IECEx approval. For certificate please refer to the IECEx homepage: http://iecex.iec.ch/
Further national certificates can be downloaded via the following link: https://r-stahl.com/en/global/support/downloads/.

EN

2 Explanation of the symbols

2.1 Symbols in these operating instructions

Symbol	Meaning
	Tips and recommendations on the use of the device
	Danger due to explosive atmosphere
	Danger due to live components
	Risk of damage to the eyes caused by optical radiation

2.2 Warning notes

Warnings must be observed under all circumstances, in order to minimize the risk due to construction and operation. The warning notes have the following structure:

- Signalling word: DANGER, WARNING, CAUTION, NOTICE
- Type and source of danger/damage
- Consequences of danger
- Taking countermeasures to avoid the danger or damage

	DANGER Danger to persons Non-compliance with the instruction results in severe or fatal injuries to persons.
	WARNING Danger to persons Non-compliance with the instruction can result in severe or fatal injuries to persons.
	CAUTION Danger to persons Non-compliance with the instruction can result in light injuries to persons.

NOTICE Avoiding material damage Non-compliance with the instruction can result in material damage to the device and / or its environment.

2.3 Symbols on the device

Symbol	Meaning
CE 0158 05594E00	CE marking according to the currently applicable directive.
Ex 02198E00	According to marking, device approved for hazardous areas.

3 Safety notes

3.1 Operating instructions storage

- Read the operating instructions carefully.
- Store the operating instructions at the mounting location of the device.
- Observe applicable documents and operating instructions of the devices to be connected.

3.2 Safe use

Before mounting

- Read and observe the safety notes in these operating instructions!
- Ensure that the contents of these operating instructions are fully understood by the personnel in charge.
- Use the device in accordance with its intended and approved purpose only.
- Always consult R. STAHL Schaltgeräte GmbH if using the device under operating conditions which are not covered by the technical data.
- We cannot be held liable for damage to the device caused by incorrect or unauthorised use or non-compliance with these operating instructions.

For assembly and installation

- Observe national assembly and installation regulations (e.g. IEC/EN 60079-14).
- Observe national safety and accident prevention regulations.
- During installation and operation, observe the information (characteristic values and rated operating conditions) on the type plates and data plates and information signs located on the device.
- Before installation, make sure that the device is not damaged.

Maintenance, repair, commissioning

- Before commissioning, make sure that the device is not damaged.
- Work on the device, such as installation, maintenance, overhaul, repair, may only be carried out by appropriately authorised and trained personnel.
- Perform only maintenance work or repair described in these operating instructions.

EN

3.3 Intended Use

The LED floodlight 6125 is equipment
- for lighting areas, work spaces and objects
- can be used indoors and outdoors
- for stationary mounting
- for use in Zones 1, 21, 2, 22 and in the safe area

3.4 Modifications and alterations

	DANGER Explosion hazard due to modifications and alterations to the device! Non-compliance results in severe or fatal injuries. • Do not modify or alter the device.
	No liability or warranty for damage resulting from modifications and alterations.

4 Function and device design

	DANGER Explosion hazard due to improper use! Non-compliance results in severe or fatal injuries. • Use the device only in accordance with the operating conditions described in these operating instructions. • Use the device only for the intended purpose specified in these operating instructions.

4.1 Function

Application range

The LED floodlight 6125 is equipment used for lighting areas, work equipment and objects.
It can be used indoors and outdoors.
The floodlight is certified for use in Zones 1, 2, 21 and 22 hazardous areas.

4.2 Device design

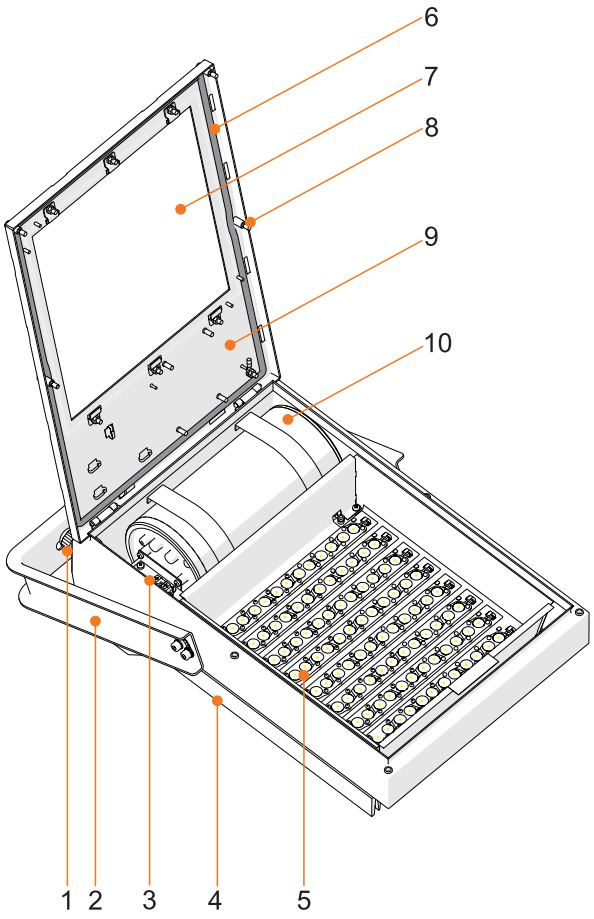

1	Cable glands	6	Seal
2	Mounting bracket	7	Luminaire glass cover
3	Connection terminal	8	Mounting screws
4	Heat sink (only for 210 W version)	9	Enclosure cover
5	LEDs	10	LED-Driver

EN

5 Technical data

Explosion Protection

Global (IECEx)

Gas and dust	IECEx EPS 15.0087 Ex db eb op is IIC T4 Gb Ex tb op is IIIC T*°C Db

Europe (ATEX)

Gas and dust	EPS 15 ATEX 1 114 Ⓔx II 2G Ex db eb op is IIC T4 Gb Ⓔx II 2D Ex tb op is IIIC T*°C Db

	Power	at ambient temperature	Temperature class
6125/1...-23..-....-... **6125/1...-44..-....-...**	120 W 210 W	≤ +60 °C	T5 / T95 °C
6125/1...-23..-....-...	120 W	≤ +50 °C	T6 / T80 °C
6125/1...-44..-....-...	210 W	≤ +45 °C	T6 / T80 °C

Certifications and certificates

Certificates	IECEx, ATEX, EAC (TR-CU), India (PESO)

Technical Data

Electrical data

Control gear

Rated voltage: AC: 220 to 240 V ±10 %; 50 to 60 Hz

Rated current

	Ambient temperature	
Power	**-60 to -40 °C**	**-40 to +60 °C**
120 W	0.60 A	0.54 A
210 W	1.00 A	0.94 A

Inrush current

	120 W version	210 W version
I_{peak} (measured at 50 % I_{peak})	62 A; Δt = 330 µs	124 A; Δt = 330 µs

max. light fittings per circuit breaker

	Type B	Type C	Type B	Type C
10 A	4	8	2	4
16 A	8	14	4	7
20 A	11	19	5	9
25 A	20	23	10	11

Power factor: > 0.95

THD: ≤ 10 %

Protection class: I (with internal PE connection)

EN

Technical Data

Luminous characteristics

Standard

Light colour: Cool white
Colour rendering R_a: ≥ 70
Colour temperature [K]: 5,700 K

Alternative

Light colour: Warm white
Colour rendering R_a: ≥ 80
Colour temperature [K]: 4,000 K

Luminous flux / Luminaire efficacy

	6125/11..-2	6125/11..-4
Power consumption [W]	120	210
Wide-beam		
Luminous flux [lm]	11,763	19,658
Luminaire efficacy [lm/W]	98	94
Medium-beam		
Luminous flux [lm]	12,669	20,966
Luminaire efficacy [lm/W]	105	99
Narrow-beam		
Luminous flux [lm]	12,081	19,979
Luminaire efficacy [lm/W]	101	95

Values apply to T_a = +25 °C.

Luminous flux decline

at ambient temperature

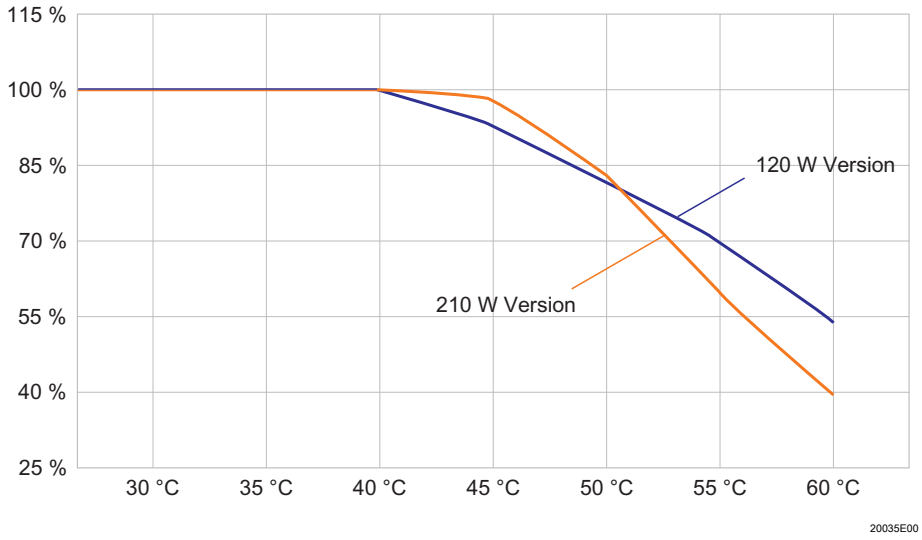

Ambient conditions

Operating temperature range

-60 to +60 °C *

* Note: Possible to operate the luminaire at -60 °C, provided the luminaire is switched on at -40 °C. Delay of 10 seconds below -40 °C during cold start

Storage temperature

-40 to +75 °C

EN

Technical Data

Service life

	$T_a \leq$ +40 °C	T_a at +45 °C	T_a at +50 °C	T_a at +55 °C	T_a at +60 °C
$L_{70}B_{10}C_{10}$	100,000 h	80,000 h	80,000 h	60,000 h	50,000 h

$L_xB_yC_z$
At the end of the service life:

- Luminous flux declines to "x" percent
- Up to "y" percent of all luminaires fall below "x"
- Up to "z" percent of all luminaires break down completely

Mechanical data

Degree of protection	IP66 (IEC 60529)
Impact strength (IK code)	IK10 (IEC 62262)
Material	
Enclosure	**6125/....-....-....-.30** Stainless steel SS304 (1.4301 or V2A), without powder coating **6125/....-....-....-.42** Stainless steel SS316L (1.4404 or V4A), with powder coating
Enclosure colours	Colour white, similar to RAL 9010
Seal	Foamed silicone in luminaire cover
Lamp cover	Toughened glass
Bracket	Stainless steel SS304 (1.4301 or V2A), without powder coating or Stainless steel SS316L (1.4404 or V4A), without powder coating
Luminaire locking	Pan head screw, M6, stainless steel Hinged enclosure cover

Mounting / Installation

Cable entry	1 x cable glands Series 8161 1 x stopping plugs Series 8290
Connection	Standard: 5-pole (2 x L1, 2 x L2, 2 x L3, 2 x N, 2 x PE) Spring clamp terminals 0.75 to 4 mm^2 solid / stranded Stripping length: 10 to 11 mm Optional: 5-pole (2 x L1, 2 x L2, 2 x L3, 2 x N, 2 x PE) Spring clamp terminals 0.75 to 4 mm^2 finely and extra finely stranded 0.75 to 6 mm^2 solid Stripping length: 13 to 15 mm
Through wiring	max. 12 A

For further technical data, see r-stahl.com.

Alternative material:
Enclosure:
- stainless steel SS304 (1.4301 or V2A) single powder-coated
- stainless steel SS316L (1.4404 or V4A) without powder coating

6 Transport and storage

- Transport and store the device only in the original packaging.
- Store the device in a dry place (no condensation) and vibration-free.
- Do not drop the device.

7 Mounting and installation

DANGER

Explosion hazard due to incorrect installation of the device!
Non-compliance results in severe or fatal injuries.
- Carry out installation strictly according to the instructions and national safety and accident prevention regulations to maintain the explosion protection.
- Select and install the electrical device so that explosion protection is not affected due to external influences, i.e. pressure conditions, chemical, mechanical, thermal and electric impact such as vibration, humidity and corrosion (see IEC/EN 60079-14).
- The device must only be installed by trained qualified personnel who is familiar with the relevant standards.

NOTICE

Malfunction or device damage caused by condensation.
Non-compliance can result in material damage!
- operate the luminaire continuously or periodically over extended periods of time.
- avoid thermal bridges.

EN

7.1 Dimensions / fastening dimensions

Dimensional drawings (all dimensions in mm [inches]) – Subject to modification

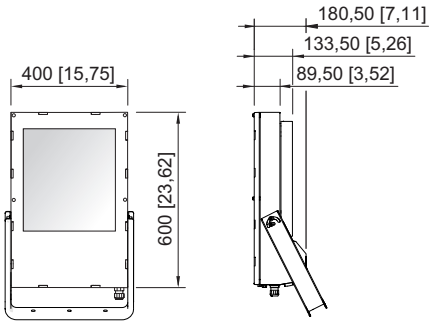

18200E00

Floodlights
with cooling element
(Version 210 W)

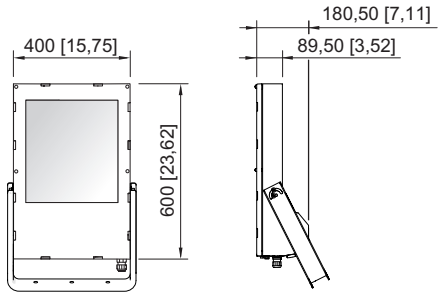

18201E00

Floodlights
without cooling element
(Version 120 W)

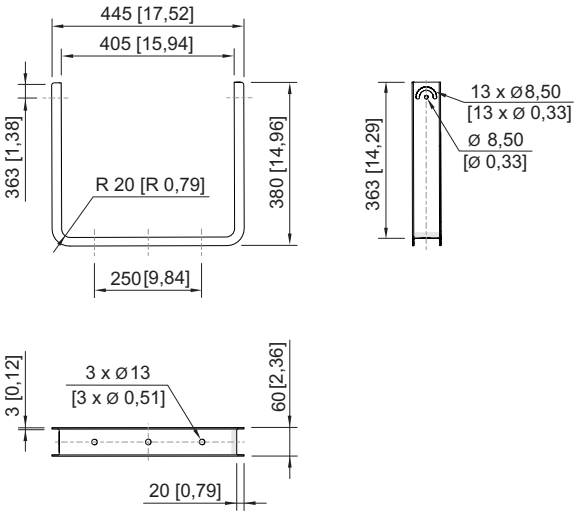

17561E00

Mounting bracket

7.2 Mounting / dismounting, operating position

	DANGER Explosion hazard due to inadmissible heating! Non-compliance results in severe or fatal injuries. • Avoid external heat sources and/or direct sunlight (risk of change of temperature class or change of maximum permissible surface temperature). • Do not exceed the maximum ambient temperature due to external heat sources (premature failure of equipment).
	CAUTION Risk of damage to the eyes caused by optical radiation! Non-compliance can result in light injuries! • Minimum distance of at least 8.23 m between the luminaire and the eye of the viewer for the version with narrow-beam light distribution.
	The luminaire is suitable for wall, ceiling mounting and pole mounting with a mounting bracket.

- Maximum tightening torque of 10 Nm for connection screw of the mounting bracket and floodlight.
- Pendant mounting with ring eyes (M6).

EN

7.3 Installation

7.3.1 Opening and Closing of the Enclosure

DANGER

Risk of electric shock due to improper opening!
Non-compliance results in severe or fatal injuries.
- Open luminaires without switch only in de-energized state (see information plate on the lock)!

NOTICE

Danger due to electrostatic discharge.
Electronic components can be destroyed if touched.
- Do not touch the LED-PCBs!

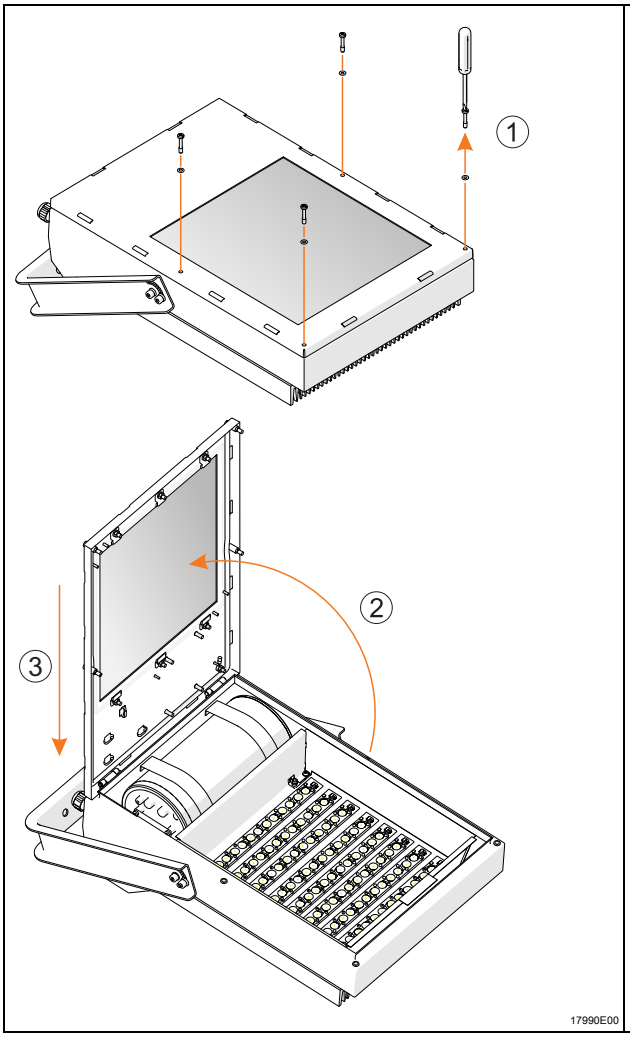

Opening:
- Loosen the four mounting screws of the enclosure cover (1).
- Carefully open the enclosure cover (2).
- Swivel down the enclosure cover (3).

Proceed in reverse order to close:
- Raise the enclosure cover (3).
- Carefully close the enclosure cover (2).
- Tighten the enclosure cover with four mounting screws (tightening torque of 5 Nm) (1).

EN

7.3.2 Electrical connections

Electrical connection

Observe the maximum clamping possibility of the connection terminals (see chapter "Technical data").

Observe the following when connecting to the electrical connection:

- Clamping must be carried out precisely.
- Do not clamp any part of the conductor insulation.
- Do not mix up the conductors.
- Observe the technical regulations when connecting the conductor.
- Clamp the conductor firmly.

Connection terminals

Standard:	**Optional:**
Spring clamp terminals	Spring clamp terminals
Clamping range: 0.75 to 4 mm^2 solid and finely stranded (2 free clamping units per pole available)	**Clamping range:** 0.75 to 4 mm^2 finely and extra finely stranded 0.75 to 6 mm^2 solid (2 free clamping units per pole available)
Stripping length: 10 to 11 mm	**Stripping length:** 13 to 15 mm

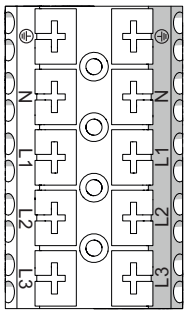

15516E00

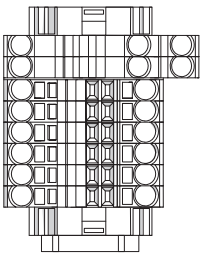

18616E00

L1, L2, L3 = phase
N = neutral conductor
PE = protective conductor

Through wiring of the mains supply connection

i	Through wiring with 2.5 mm^2 cross section for max. 12 A.

EN

7.3.3 Cable entries

The standard luminaire is delivered with 2 lead-in holes, 1 cable gland and 1 stopping plug.

Tightening torques for components from R. STAHL Schaltgeräte GmbH

Luminaires with installed cable entries and stopping plugs from R. STAHL Schaltgeräte GmbH must be tightened using the following values:

		Tightening torque	
		Connection thread	Pressure screw
Cable entry 8161	M20 x 1.5	2.3 Nm	1.5 Nm
	M25 x 1.5	3.0 Nm	2.0 Nm
Stopping plugs 8290	M20 x 1.5	1.0 Nm	–
	M25 x 1.5	1.5 Nm	–

Luminaires with cable entries and stopping plugs which are not supplied by R. STAHL Schaltgeräte GmbH

DANGER

Explosion hazard due to impermissible cable entries and stopping plugs!
Non-compliance results in severe or fatal injuries.

- Only use separately certified cable glands and stopping plugs which have been tested and certified according to Directive 2014/34/EU (ATEX) or IECEx (CoC) and which comply with the standard version stated in the certificate of the luminaire.

Please observe the following:

- the required dust resistance!
- the required type of protection!
- the required temperature resistance!
- the IP degree of protection according to the rating plate!
- the operating instructions of the cable entries and stopping plugs!
- the required tightening torques!
- the range of the permissible cable diameter!
- Insert the metal cable entries and/or stopping plugs into the PE!

8 Commissioning

DANGER

Explosion hazard due to incorrect installation!
Non-compliance results in severe or fatal injuries.
- Check the device for proper installation before commissioning.
- Comply with national regulations.

NOTICE

Malfunction or device damage caused by condensation.
Non-compliance can result in material damage!
- operate the luminaire continuously or periodically over extended periods of time.
- avoid thermal bridges.

Before commissioning, ensure the following:
- Check the mounting and installation.
- Inspect enclosure for damage.
- If necessary, remove foreign bodies.
- If necessary, clean the connection chamber.
- Check if the conductors have been inserted correctly.
- Check if all screws and nuts have been tightened firmly.
- Check if all drilled holes are closed.
- Check whether all the cable entries and stopping plugs have been tightened firmly.
- Check if all conductors have been clamped firmly.
- Check if the line voltage and the rated operational voltage are consistent.
- Check if the permissible conductor diameter for the corresponding cable entries have been used.
- Check if the device is closed according to regulations.
- Check whether the bracket mounting & cover mounting screws are tightened with proper torque.

EN

9 Maintenance, Overhaul, Repair

DANGER

Explosion hazard due to hot built-in components!
Non-compliance results in severe or fatal injuries.
- Only open the enclosure in switched-off state.
- The device must be allowed to cool down for at least 15 minutes before opening it.

CAUTION

Risk of electric shock or malfunction of the device due to unauthorized work!
Non-compliance can result in light injuries!
- Before carrying out work on the device, switch off voltage supply.
- Work performed on the device must only be carried out by authorized and appropriately trained qualified electricians.

NOTICE

Danger due to electrostatic discharge.
Electronic components can be destroyed if touched.
- Do not touch the LED-PCBs!

9.1 Maintenance

- Consult the relevant national regulations to determine the type and extent of inspections.
- Adapt inspection intervals to the operating conditions.
- Perform maintenance and repair work in accordance with IEC 60079-17 and IEC 60079-19.

Observe the relevant national regulations in the country of use.

As a minimum, check the following points during maintenance work on the device:
- Whether the clamping screws holding the cables are securely seated
- Whether the device enclosure and/or protective enclosure have cracks or other visible signs of damage
- Whether the seal shows signs of ageing or damage (completely replace enclosure components with damaged foamed seal)
- Whether the device is clean inside and out
- Whether the permissible temperatures (in accordance with EN 60079) are complied with
- Whether the cable entry is intact and securely tightened
- Whether the cables and lines show signs of ageing and damage
- Intended use and function.

NOTICE
Moisture on the inside of the luminaire can result in damage to electric and electronic components. • Remove moisture with a cloth! • Determine the source and eliminate the cause! • Avoid condensation and thermal bridges!

9.2 Repair

	DANGER
	Explosion hazard due to improper repair! Non-compliance results in severe or fatal injuries. • Repair work on the devices must be performed only by R. STAHL Schaltgeräte GmbH.

9.3 Returning the device

- Only return or package the devices after consulting R. STAHL!
  Contact the responsible representative from R. STAHL.

R. STAHL's customer service is available to handle returns if repair or service is required.

- Contact customer service personally.

or

- Go to the r-stahl.com website.
- Under "Support" > "RMA" > select "RMA-REQUEST".
- Fill out the form and send it.
  You will automatically receive an RMA form via email. Please print this file off.
- Send the device along with the RMA form in the packaging to
  R. STAHL Schaltgeräte GmbH (refer to chapter 1.1 for the address).

10 Cleaning

- To avoid electrostatic charging, the devices located in potentially explosive areas may only be cleaned using a damp cloth.
- When cleaning with a damp cloth, use water or mild, non-abrasive, non-scratching cleaning agents.
- Do not use aggressive detergents or solvents.

EN

11 Disposal

- Observe national and local regulations and statutory regulation regarding disposal.
- Separate materials when sending it for recycling.
- Ensure environmentally friendly disposal of all components according to the statutory regulations.

12 Accessories and Spare parts

NOTICE
Malfunction or damage to the device due to the use of non-original components. Non-compliance can result in material damage. • Use only original accessories and spare parts from R. STAHL Schaltgeräte GmbH.

i	For accessories and spare parts, see data sheet on our homepage r-stahl.com.

EU-Konformitätserklärung
EU Declaration of Conformity
Déclaration de Conformité UE

R. STAHL Schaltgeräte GmbH • Am Bahnhof 30 • 74638 Waldenburg, Germany
erklärt in alleiniger Verantwortung, *declares in its sole responsibility, déclare sous sa seule responsabilité,*

dass das Produkt: *that the product:* *que le produit:*	LED Scheinwerfer *LED Floodlight* *LED Projecteur*
Typ(en), *type(s), type(s):*	**6125/1**

mit den Anforderungen der folgenden Richtlinien und Normen übereinstimmt.
is in conformity with the requirements of the following directives and standards.
est conforme aux exigences des directives et des normes suivantes.

Richtlinie(n) / *Directive(s) / Directive(s)*		Norm(en) / *Standard(s) / Norme(s)*
2014/34/EU *2014/34/EU* *2014/34/UE*	**ATEX-Richtlinie** *ATEX Directive* *Directive ATEX*	EN 60079-0:2012 + A11:2013 EN 60079-1:2014 EN 60079-7:2015 EN 60079-28:2015 EN 60079-31:2014
Kennzeichnung, *marking, marquage:*		**II 2 G Ex db eb op is IIC T4 Gb** **II 2 D Ex tb op is IIIC T80 °C/ T95 °C Db** CE 0158
EG/EU-Baumusterprüfbescheinigung: *EC/EU Type Examination Certificate:* *Attestation d'examen UE/CE de type:*		**EPS 15 ATEX 1114** (Bureau Veritas Consumer Produkt Services GmbH, Businesspark A96, 86842 Türkheim, Germany, NB 2004)
Produktnormen nach Niederspannungsrichtlinie: *Product standards according to Low Voltage Directive:* *Normes des produit pour la Directive Basse Tension:*		EN 60598-1:2015 EN 60598-2-22:2014 EN 62471:2008 EN 62493:2010
2014/30/EU *2014/30/EU* *2014/30/UE*	**EMV-Richtlinie** *EMC Directive* *Directive CEM*	EN 61547:2009 EN 55015:2013 + A1:2015 EN 61000-3-2:2014 EN 61000-3-3:2013
2011/65/EU *2011/65/EU* *2011/65/UE*	**RoHS-Richtlinie** *RoHS Directive* *Directive RoHS*	EN 50581:2012

Waldenburg, 2018-02-02

Ort und Datum
Place and date
Lieu et date

i.V.

Dr. A. Kaufmann
Leiter BU Leuchten & Signalgeräte
Head of BU Lightings & Signalling
Directeur BU Eclairage & Appareils de signalisation

i.V.

J. Freimüller
Leiter Qualitätsmanagement
Director Quality Management
Directeur Assurance de Qualité