Operating instructions

Additional languages r-stahl.com

EN

Universal spotlight LED

Series 6050/6

EN

Contents

1 General Information 3
1.1 Manufacturer 3
1.2 Information regarding the operating instructions 3
1.3 Further documents 3
1.4 Conformity with standards and regulations 3
2 Explanation of the symbols 4
2.1 Symbols in these operating instructions 4
2.2 Warning notes 4
2.3 Symbols on the device 5
3 Safety notes 5
3.1 Operating instructions storage 5
3.2 Safe use 5
3.3 Intended Use 6
3.4 Modifications and alterations 6
4 Function and device design 6
4.1 Function 6
4.2 Device design 7
5 Technical data 7
6 Transport and storage 14
7 Mounting and installation 14
7.1 Dimensions / fastening dimensions 15
7.2 Mounting / dismounting, operating position 17
7.3 Installation 20
8 Commissioning 22
9 Maintenance, Overhaul, Repair 22
9.1 Maintenance 23
9.2 Repair 23
9.3 Returning the device 24
10 Cleaning 24
11 Disposal 25
12 Accessories and Spare parts 25

EN

1 General Information

1.1 Manufacturer

R. STAHL Schaltgeräte GmbH
Business Unit Lighting & Signalling
Nordstr. 10
99427 Weimar
Germany

Phone: +49 3643 4324
Fax: +49 3643 4221-76
Internet: r-stahl.com
E-mail: info@r-stahl.com

R. STAHL Schaltgeräte GmbH

Am Bahnhof 30
74638 Waldenburg
Germany

Phone: +49 7942 943-0
Fax: +49 7942 943-4333
Internet: r-stahl.com
E-mail: info@r-stahl.com

1.2 Information regarding the operating instructions

ID-No.: 264820 / 6050628300
Publication Code: 2026-06-25·BA00·III·en·11

The original instructions are the English edition.
They are legally binding in all legal affairs.

1.3 Further documents

- Data sheet

For documents in additional languages, see r-stahl.com.

1.4 Conformity with standards and regulations

IECEx, ATEX, EU Declaration of Conformity and further national certificates can be downloaded via the following link: https://r-stahl.com/en/global/support/downloads/.
IECEx is also available at: https://www.iecex.com/

EN

2 Explanation of the symbols

2.1 Symbols in these operating instructions

Symbol	Meaning
	Tips and recommendations on the use of the device
	General danger
	Danger due to explosive atmosphere
	Danger due to energised parts

2.2 Warning notes

Warnings must be observed under all circumstances, in order to minimize the risk due to construction and operation. The warning notes have the following structure:

- Signalling word: DANGER, WARNING, CAUTION, NOTICE
- Type and source of danger/damage
- Consequences of danger
- Taking countermeasures to avoid the danger or damage

	DANGER
	Danger to persons Non-compliance with the instruction results in severe or fatal injuries to persons.

	WARNING
	Danger to persons Non-compliance with the instruction can result in severe or fatal injuries to persons.

	CAUTION
	Danger to persons Non-compliance with the instruction can result in light injuries to persons.

NOTICE
Avoiding material damage Non-compliance with the instruction can result in material damage to the device and / or its environment.

2.3 Symbols on the device

Symbol	Meaning
CE 0158 05594E00	CE marking according to the currently applicable directive.
Ex 02198E00	According to marking, device approved for hazardous areas.

3 Safety notes

3.1 Operating instructions storage

- Read the operating instructions carefully.
- Store the operating instructions at the mounting location of the device.
- Observe applicable documents and operating instructions of the devices to be connected.

3.2 Safe use

Before mounting

- Read and observe the safety notes in these operating instructions!
- Ensure that the contents of these operating instructions are fully understood by the personnel in charge.
- Use the device in accordance with its intended and approved purpose only.
- Always consult R. STAHL Schaltgeräte GmbH if using the device under operating conditions which are not covered by the technical data.
- We cannot be held liable for damage to the device caused by incorrect or unauthorised use or non-compliance with these operating instructions.

For assembly and installation

- Observe national assembly and installation regulations (e.g. IEC/EN 60079-14).
- Observe national safety and accident prevention regulations.
- During installation and operation, observe the information (characteristic values and rated operating conditions) on the type plates and data plates and information signs located on the device.
- Before installation, make sure that the device is not damaged.

Maintenance, repair, commissioning

- Before commissioning, make sure that the device is not damaged.
- Work on the device, such as installation, maintenance, overhaul, repair, may only be carried out by appropriately authorised and trained personnel.
- Perform only maintenance work or repair described in these operating instructions.

EN

3.3 Intended Use

The luminaire is equipment
- for lighting areas, work spaces and objects
- can be used indoors and outdoors
- for stationary mounting
- for use in Zones 1, 21, 2, 22 and in the safe area

3.4 Modifications and alterations

	DANGER
EX	Explosion hazard due to modifications and alterations to the device! Non-compliance results in severe or fatal injuries. • Do not modify or alter the device.

i	No liability or warranty for damage resulting from modifications and alterations.

4 Function and device design

	DANGER
EX	Explosion hazard due to improper use! Non-compliance results in severe or fatal injuries. • Use the device only in accordance with the operating conditions described in these operating instructions. • Use the device only for the intended purpose specified in these operating instructions.

4.1 Function

Application range

The luminaire 6050/6 is used as equipment for lighting areas, work equipment and objects.
It can be used indoors and outdoors.
The luminaire is approved for use in hazardous areas of Zones 1, 2, 21 and 22.

Mode of operation

The luminaire can be dimmed and switched via a DALI interface (optional).

EN

4.2 Device design

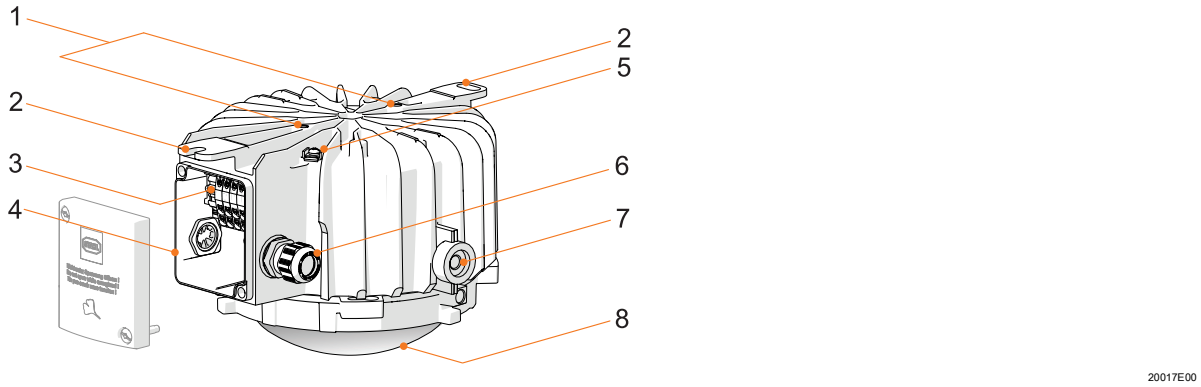

1	Thread for M8 ring bolts	5	External earth connection
2	Fastening clip for direct fastening with screws	6	Cable entry
		7	Holder for pivoting bracket
3	Terminal block	8	Glass
4	Connection box		

5 Technical data

Explosion Protection

Global (IECEx)

Gas and dust	IECEx EPS 17.0093 Ex db eb op is IIC T.[1)] Gb Ex tb op is IIIC T...°C[1)] Db

Europe (ATEX)

Gas and dust	EPS 17 ATEX 1 181 Ⓔx II 2 G Ex db eb op is IIC T.[1)] Gb Ⓔx II 2 D Ex tb op is IIIC T...°C[1)] Db

1)

Variant	Temperature class	Max. surface temperature
6050/604-...-...-.....-...	T4	110 °C
6050/606-...-...-.....-...	T6	80 °C

Certifications and certificates

Certificates	IECEx, ATEX, EAC (TR)

EN

Technical Data

Electrical data

Rated operational voltage

Variant	Power	Voltage
6050/6xx-202-xxx-xxxxxx	20 W	220 to 240 V AC, 50/60 Hz
6050/6xx-400-xxx-xxxxxx	40 W	110 to 277 V AC, 50/60 Hz
6050/6xx-600-xxx-xxxxxx	60 W	
6050/6xx-401-xxx-xxxxxx 6050/6xx-403-xxx-xxxxxx	40 W	220 to 240 V AC, 50/60 Hz
6050/6xx-601-xxx-xxxxxx 6050/6xx-603-xxx-xxxxxx	60 W	
6050/6xx-801-xxx-xxxxxx 6050/6xx-803-xxx-xxxxxx	80 W	
6050/6xx-411-xxx-xxxxxx	40 W	220 to 240 V AC, 50/60 Hz 196 to 250 V DC
6050/6xx-611-xxx-xxxxxx	60 W	
6050/6xx-811-xxx-xxxxxx	80 W	

Inrush current

Variant	Power	Start-up current
6050/6xx-202-xxx-xxxxxx	20 W	I_{peak} = ≤ 25 A; Δt = 150 µs
6050/6xx-400-xxx-xxxxxx	40 W	I_{peak} = 55 A; Δt = 230 µs
6050/6xx-600-xxx-xxxxxx	60 W	
6050/6xx-4x1-xxx-xxxxxx 6050/6xx-4x3-xxx-xxxxxx	40 W	I_{peak} = 57 A; Δt = 210 µs
6050/6xx-6x1-xxx-xxxxxx 6050/6xx-6x3-xxx-xxxxxx	60 W	
6050/6xx-8x1-xxx-xxxxxx 6050/6xx-8x3-xxx-xxxxxx	80 W	

Maximum number of luminaires per miniature circuit breaker at 230 V:

Variant	Type	10 A	16 A	20 A	25 A
6050/6xx-202-xxx-xxxxxx	B	23	36	45	57
	C	39	61	76	96
6050/6xx-400-xxx-xxxxxx 6050/6xx-600-xxx-xxxxxx	B	7	11	13	17
	C	11	18	22	28
6050/6xx-4x1-xxx-xxxxxx 6050/6xx-4x3-xxx-xxxxxx 6050/6xx-6x1-xxx-xxxxxx 6050/6xx-6x3-xxx-xxxxxx 6050/6xx-8x1-xxx-xxxxxx 6050/6xx-8x3-xxx-xxxxxx	B	7	12	14	21
	C	11	19	23	32

Power factor cos φ ≥ 0.9

Protection class I (internal + external PE / PA connection)

EN

Technical Data

Luminous characteristics

Neutral white
Colour rendering R_a: ≥ 80
Colour temperature [K]: 5,000

Version	20 W	40 W	60 W	80 W
Power consumption [W]	16.4	40.1	60.3	77.7
Clear glass				
Luminous flux [lm]	2,015	5,077	7,357	8,772
Luminaire efficacy [lm/W]	122.9	126.6	122.0	112.8
Matted glass				
Luminous flux [lm]	1,866	4,698	6,802	8,110
Luminaire efficacy [lm/W]	113.8	117.1	112.8	104.4
Energy efficiency class	C	D, E	D, E	D, E

Extra-warm white
Colour rendering R_a: ≥ 80
Colour temperature [K]: 2,200

Version	20 W	40 W	60 W	80 W
Power consumption [W]	–	40.1	60.3	77.7
Clear glass				
Luminous flux [lm]	–	4,020	5,825	6,946
Luminaire efficacy [lm/W]	–	100	97	89
Matted glass				
Luminous flux [lm]	–	3,720	5,386	6,422
Luminaire efficacy [lm/W]	–	93	89	83
Energy efficiency class	–	F	F	F

Warm white
Colour rendering R_a: ≥ 80
Colour temperature [K]: 2,700

Version	20 W	40 W	60 W	80 W
Power consumption [W]	16.4	40.1	60.3	77.7
Clear glass				
Luminous flux [lm]	1,811	4,465	6,613	7,883
Luminaire efficacy [lm/W]	110	114	110	101
Matted glass				
Luminous flux [lm]	1,677	4,219	6,114	7,288
Luminaire efficacy [lm/W]	102	105	101	94
Energy efficiency class	D	D, E	D, E	D, E

EN

Technical Data

Warm neutral white
Colour rendering R_a: ≥ 80
Colour temperature [K]: 4,000

Version	20 W	40 W	60 W	80 W
Power consumption [W]	16.4	40.1	60.3	77.7
Clear glass				
Luminous flux [lm]	1,955	4,925	7,136	8,508
Luminaire efficacy [lm/W]	119.2	122.8	118.3	109.5
Matted glass				
Luminous flux [lm]	1,810	4,557	6,598	8,110
Luminaire efficacy [lm/W]	110.4	113.6	109.4	101.2
Energy efficiency class	D	D, E	D, E	D, E

Daylight white
Colour rendering R_a: ≥ 80
Colour temperature [K]: 6,500

Version	20 W	40 W	60 W	80 W
Power consumption [W]	16.4	40.1	60.3	77.7
Clear glass				
Luminous flux [lm]	1,955	4,925	7,136	8,508
Luminaire efficacy [lm/W]	119.2	122.8	118.3	109.5
Matted glass				
Luminous flux [lm]	1,810	4,557	6,598	8,110
Luminaire efficacy [lm/W]	110.4	113.6	109.4	101.2
Energy efficiency class	D	D, E	D, E	D, E

Values apply to T_a = +25 °C.

Energy efficiency class of the light source

The device contains a light source in the energy efficiency class according to the information in the previous table
(according to the Energy Labelling Regulation for light sources)

EN

Technical Data

Luminous flux decline	• during DC operation to 50% • at ambient temperature

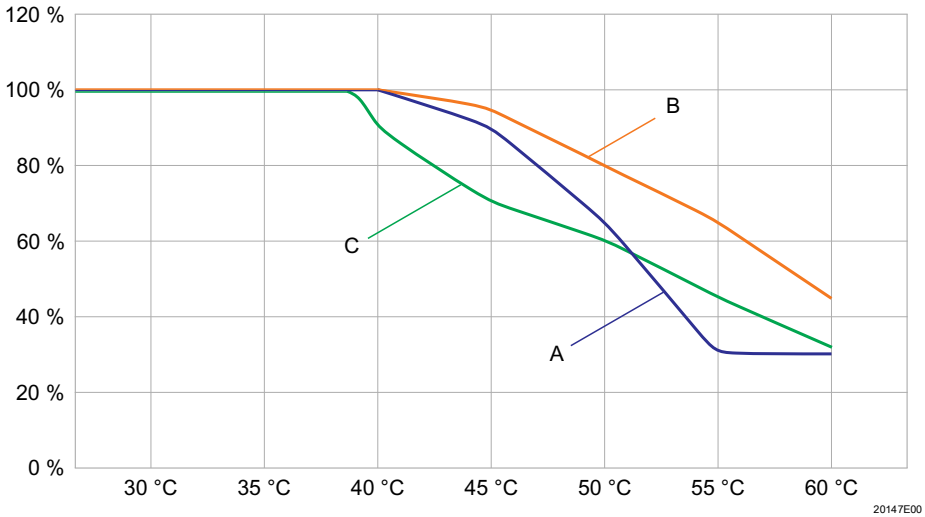

A: 6050/6xx-202-xxx-xxxxxx
B: 6050/6xx-400-xxx-xxxxxx
C: 6050/6xx-600-xxx-xxxxxx

Luminous flux decline	**The luminous flux decline of the 2,200 K variants is 5 K less than it is for the specified variants.**

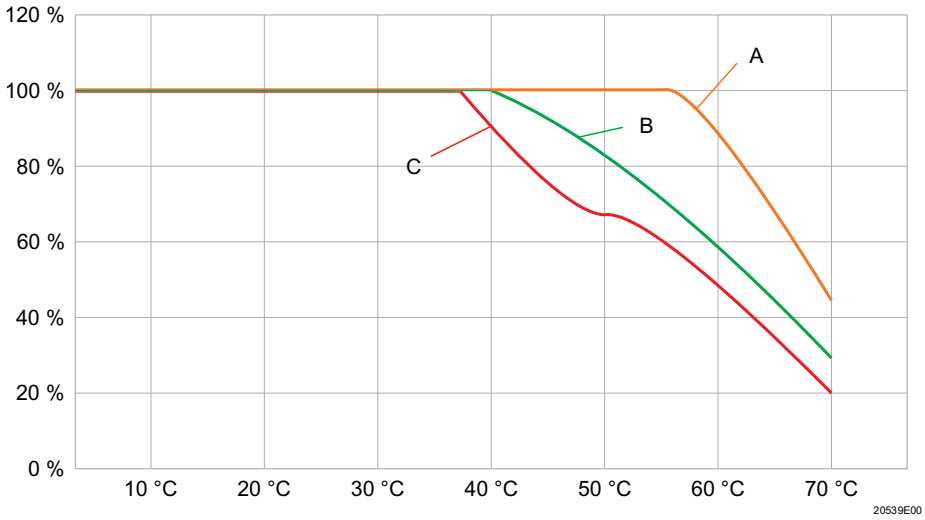

A: 6050/6xx-4x1-xxx-xxxxxx, 6050/6xx-403-xxx-xxxxxx
B: 6050/6xx-6x1-xxx-xxxxxx, 6050/6xx-603-xxx-xxxxxx
C: 6050/6xx-8x1-xxx-xxxxxx, 6050/6xx-803-xxx-xxxxxx

EN

Technical Data

Ambient conditions

Functional ambient temperature range

Temperature class T4

Variant	Power	Ambient temperature
6050/604-202-xxx-xxxxxx	20 W	-40 to +60 °C
6050/604-400-xxx-xxxxxx	40 W	
6050/604-600-xxx-xxxxxx	60 W	
6050/604-4x1-xxx-xxxxxx 6050/604-403-xxx-xxxxxx	40 W	-40 to +70 °C
6050/604-6x1-xxx-xxxxxx 6050/604-603-xxx-xxxxxx	60 W	
6050/604-8x1-xxx-xxxxxx 6050/604-803-xxx-xxxxxx	80 W	

Temperature class T6

Variant	Power	Ambient temperature
6050/606-202-xxx-xxxxxx	20 W	-40 to +50 °C
6050/606-400-xxx-xxxxxx	40 W	
6050/606-600-xxx-xxxxxx	80 W	

Storage temperature: -40 to +70 °C

Service life

LED

	Ambient temperature		
	$T_a \leq 25$ °C	$T_a \leq 60$ °C	$T_a \leq 70$ °C
$L_{90}B_{50}$	80,000 h	50,000 h	25,000 h

L_xB_y
At the end of the service life:
- Luminous flux declines to "x" percent
- Up to "y" percent of all luminaires fall below "x"

Control gear

	$T_a \leq 25$ °C	$T_a \leq 70$ °C
C_{10}	100,000 h	50,000 h

C_{10} = failure rate 10%

Mechanical data

Degree of protection	IP66; IP68 (10 m immersion depth 30 min) (IEC 60598)
Material	
Enclosure	Light metal
Protective glass	Temperature-resistant pressed glass
Cover seal	Silicon
Internal reflector	Aluminium
External reflector	Highest grade aluminium
Wire guard	Steel wire (stainless steel)
Enclosure lock	Secured with an M3 screw (Torx TX) in the connection box

EN

Technical Data

Mounting / Installation

Position of normal use	any
Cable entry	
Standard	2 x M25 x 1.5; 1 x cable entry Ø 7 to 17 mm, 1 x stopping plug
Special	2 x M20 x 1.5; 1 x cable entry Ø 6 to 13 mm, 1 x stopping plug 2 x NPT $^3/_4$“ threaded holes 2 x NPT 1" threaded holes
Connection option	Spring clamp terminals Standard: 5-pole: L1, L2, L3, N, PE With DALI: 7-pole: L1, L2, L3, N, PE, DA, DA 1 x 1.5 to 4 mm^2 (finely stranded) 1 x 1.5 to 6 mm^2 (solid and finely stranded with core end sleeve) (2 free clamping units per pole available)
Mounting	Direct: By means of two integrated fastening clips on the enclosure for screws with a max. diameter of 10 mm Suspended: By means of two M8 ring bolts (accessories) installed in the integrated threads in the enclosure or by means of the single-point fastening (accessories) installed in the integrated threads in the cover Pivoting: By means of the mounting bracket (accessories) installed on the integrated holder on the enclosure On the pipe: By means of the pipe assembly kit (accessories) directly on a pipe Ø 1 1/4" to 2"
Wire guard and antiglare device	can easily be mounted later using an M6 mounting screw

Optional

DALI-connection	DALI interface in accordance with IEC 62386-207:2009-08 for the following variants:

Variant	Power
6050/6xx-4x1-xxx-xxxxxx	40 W
6050/6xx-6x1-xxx-xxxxxx	60 W
6050/6xx-8x1-xxx-xxxxxx	80 W

For further technical data, see r-stahl.com.

EN

6 Transport and storage

- Transport and store the device only in the original packaging.
- Store the device in a dry place (no condensation) and vibration-free.
- Do not drop the device.

7 Mounting and installation

	DANGER
	Explosion hazard due to electrostatic discharge! Non-complicance results in severe or fatal injuries. Do not use the device in strong charge-generating environments! The following processes/activities should be avoided: • accidental friction • particle currents

	DANGER
	Explosion hazard due to incorrect installation of the device! Non-compliance results in severe or fatal injuries. • Carry out installation strictly according to the instructions and national safety and accident prevention regulations to maintain the explosion protection. • Select and install the electrical device so that explosion protection is not affected due to external influences, i.e. pressure conditions, chemical, mechanical, thermal and electric impact such as vibration, humidity and corrosion (see IEC/EN 60079-14). • The device must only be installed by trained qualified personnel who is familiar with the relevant standards.

EN

7.1 Dimensions / fastening dimensions

Dimensional drawings (all dimensions in mm [inches]) – Subject to modification

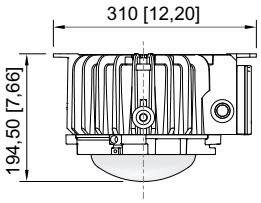

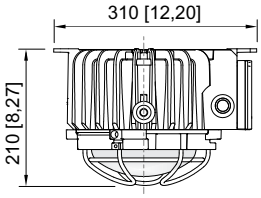

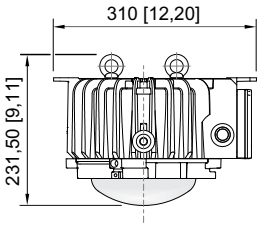

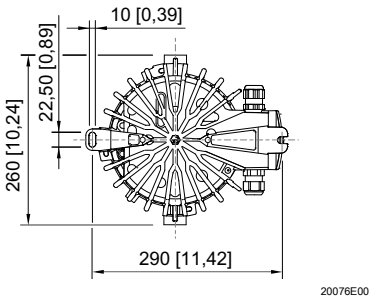

without wire guard

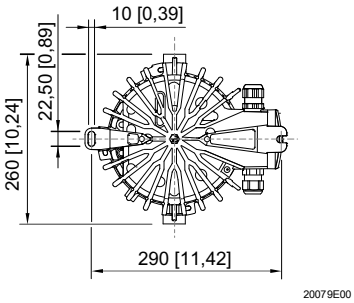

with wire guard

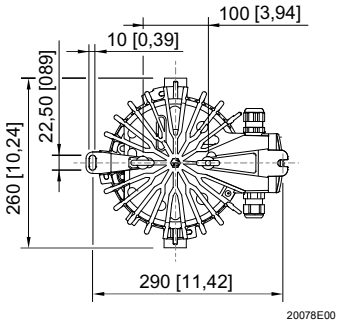

with ring eyes

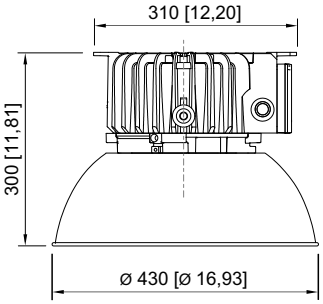

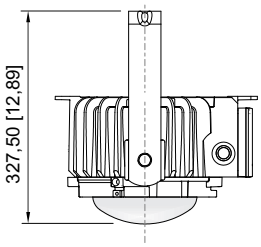

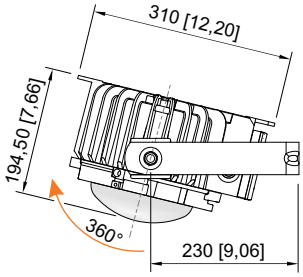

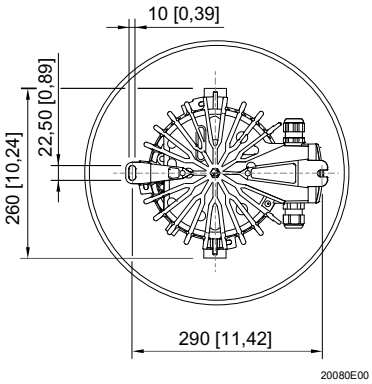

with antiglare device

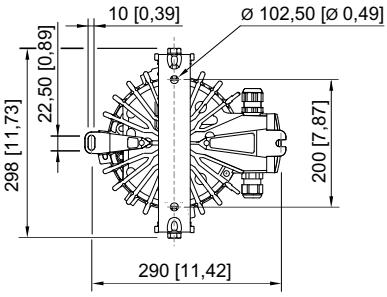

with bracket

EN

Dimensional drawings (all dimensions in mm [inches]) – Subject to modification

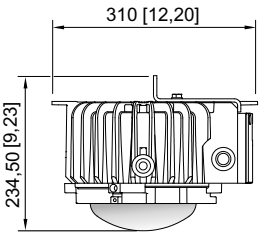

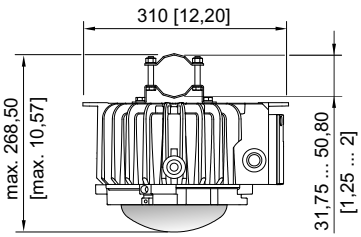

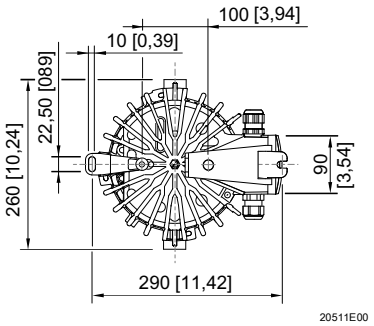

with single-point fastening

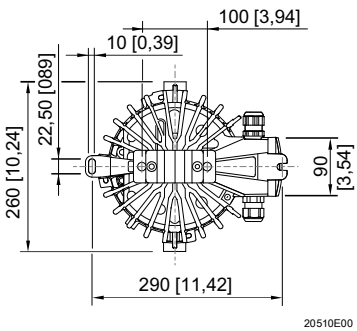

with pipe assembly kit

EN

7.2 Mounting / dismounting, operating position

i	Align the terminal box downwards for installation at an angle.

7.2.1 Wire Guard Assembly

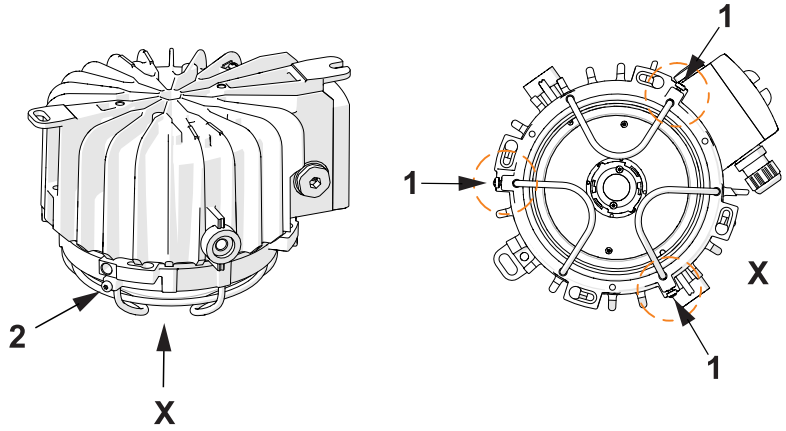

20001E00

- Insert the wire guard into the intended slots (1) of the light fitting.
- Tighten the screws (2). The wire guard is installed.

7.2.2 Assembly of the External Reflector

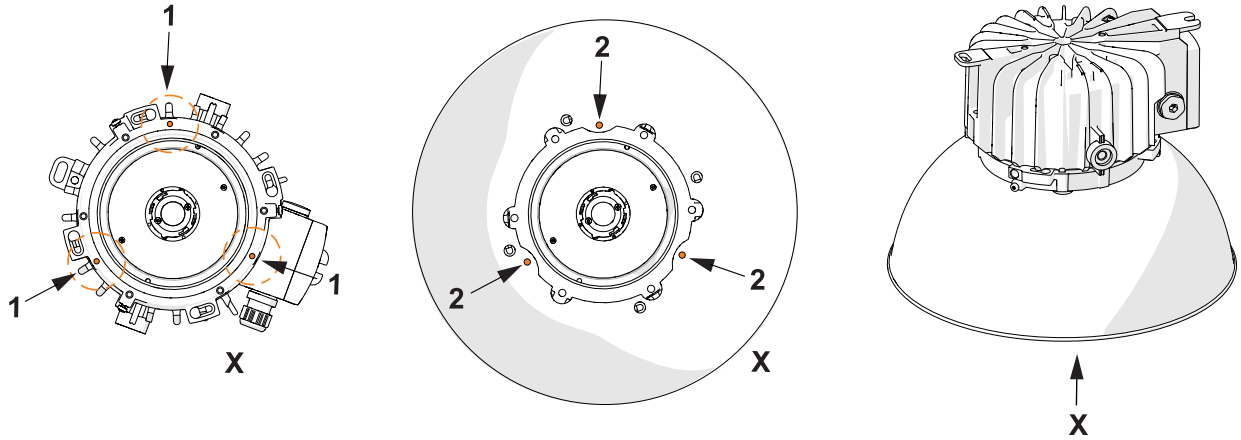

20002E00

- Attach the external reflector to the light fitting as shown on the drawing.
- Insert the screws (1) included in delivery and tighten them. The external reflector is installed.

EN

7.2.3 Assembly of the Holding Bracket

i	The retaining bracket can be used for wall or ceiling installation.

i	Thanks to the raster's adjustment option, the light fitting can be adjusted in steps of 10° to a maximum of 40°.

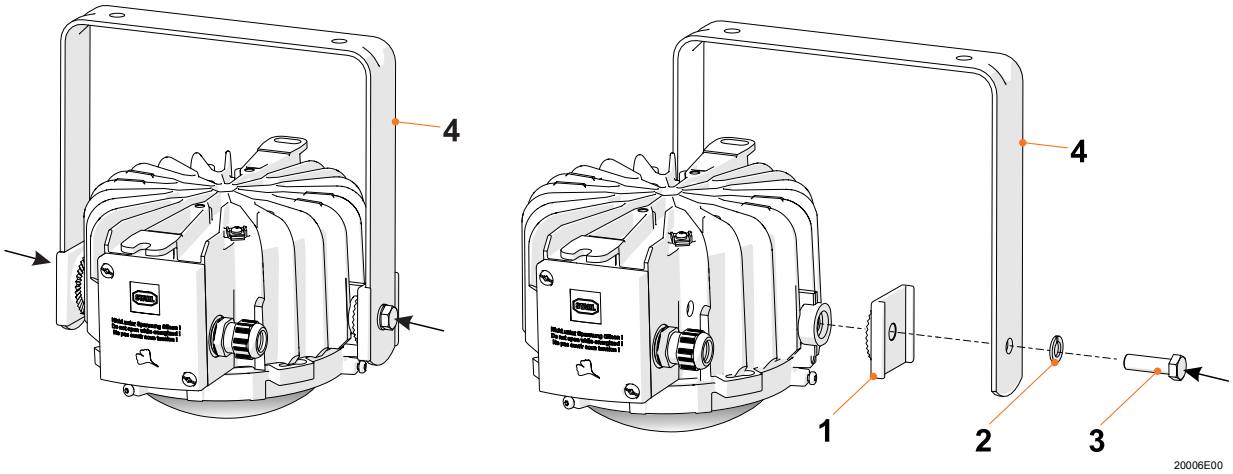

- Place the locking plate (1) against the holder for the pivoting bracket.
- Set the bracket (4) on the locking plate (1).
- Fasten the bracket (4) using the split washer (2) and screw (3).

7.2.4 Ring Bolt Assembly

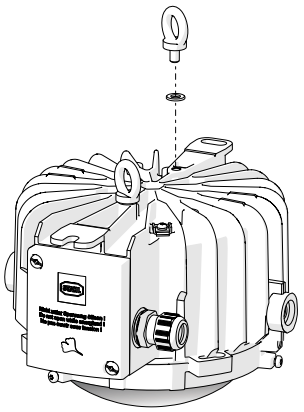	• Screw the ring bolts into the intended threaded inserts. The ring bolts can be used to suspend the light fitting.

EN

7.2.5 Mounting the single-point fastening

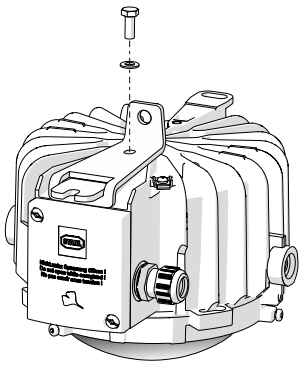 20513E00	• Mount the assembly kit to the luminaire with the enclosed hexagon screw.

7.2.6 Mounting the pipe fastening

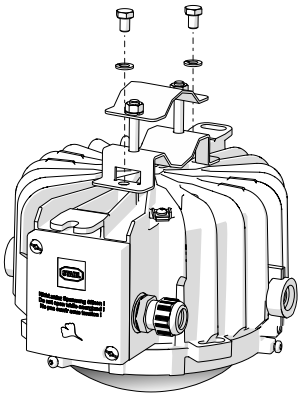 20512E00	• Mount the lower clamp with the enclosed hexagon screws. • Fit the luminaire to the pipe by means of the upper clamp and the two enclosed nuts.

EN

7.3 Installation

	DANGER
EX	Explosion hazard due to opening the enclosure cover! Non-compliance results in severe or fatal injuries. • It is prohibited to open the enclosure cover of the luminaire.

7.3.1 Electrical connections

	DANGER
EX	Explosion hazard due to faulty installation! Non-compliance results in severe or fatal injuries. • Only use conductor provided by the manufacturer for explosive areas. • Make sure that the IP protection is preserved after installation. • Comply with the relevant conductor cross-section: • 1.5 to 4 mm^2 (finely-stranded) • 1.5 to 6 mm^2 (solid and finely stranded with core end sleeve)

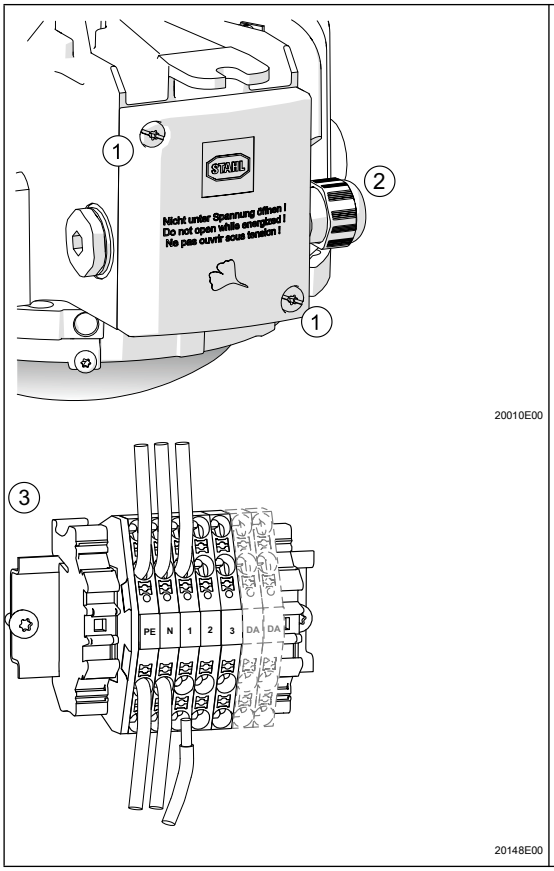

- Loosen the M6 Torx screws (1) and remove the cover.
- Loosen cable entry (2) (unscrew approx. 3 rotations).
- Insert cable into the terminal box from the outside through the cable entry.
- Strip approximately 10 mm of the cable using an appropriate tool.
- Unlock the screwless terminals (3) using a screwdriver and insert the cable. Make sure that the conductor insulation is not inserted into the terminal.
- Lock cable entry firmly by tightening completely.
- Re-attach the cover and close it using the respective screws. The light fitting is now operational.

EN

7.3.2 Cable entries

The luminaire 6050/6 is equipped with 2 entries, a cable entry and a stopping plug. The electrical connection into the EX d chamber is implemented with a hermetically sealed M 16 x 1.5 conductor bushing size.

Luminaires with cable entries and stopping plugs which are not supplied by R. STAHL Schaltgeräte GmbH

	DANGER
	Explosion hazard due to impermissible cable entries and stopping plugs! Non-compliance results in severe or fatal injuries. • Only use separately certified cable glands and stopping plugs which have been tested and certified according to Directive 2014/34/EU (ATEX) or IECEx (CoC) and which comply with the standard version stated in the certificate of the luminaire.

Please observe the following:
- the required dust resistance!
- the required type of protection!
- the required temperature resistance!
- the IP degree of protection according to the rating plate!
- the operating instructions of the cable entries and stopping plugs!
- the required tightening torques!
- the range of the permissible cable diameter!
- Insert the metal cable entries and/or stopping plugs into the PE!

To install additional permitted screw connections, proceed as follows:

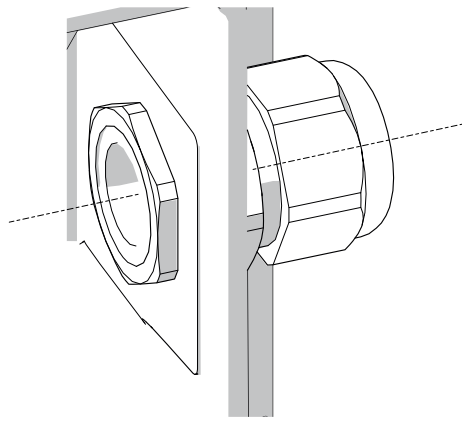 11357E00	• Insert cable entry into the terminal box and tighten with a jam nut from the inside (tightening torque: metal cable gland 3 Nm, plastic screw connection 2 Nm). • Tighten the cable entry and pressure screw of the cable entry after installation. • Use a certified stopping plug to seal the opening that is not used.

EN

8 Commissioning

	DANGER
	Explosion hazard due to incorrect installation! Non-compliance results in severe or fatal injuries. • Check the device for proper installation before commissioning. • Comply with national regulations.

Before commissioning, ensure the following:
- Check the mounting and installation.
- Check the device for damage.
- If necessary, remove foreign bodies.
- If necessary, clean the connection chamber.
- Check if the conductors have been inserted correctly.
- Check if all screws and nuts have been tightened firmly.
- Check if all drilled holes are closed.
- Check whether all the cable entries and stopping plugs have been tightened firmly.
- Check if all conductors have been clamped firmly.
- Check if the line voltage and the rated operational voltage are consistent.
- Check if the permissible conductor diameter for the corresponding cable entries have been used.
- Check if the device is closed according to regulations.

9 Maintenance, Overhaul, Repair

	CAUTION
	Risk of electric shock or malfunction of the device due to unauthorized work! Non-compliance can result in light injuries! • Before carrying out work on the device, switch off voltage supply. • Work performed on the device must only be carried out by authorized and appropriately trained qualified electricians.

	WARNING
	Risk of burns due to hot surfaces! Non-compliance can result in severe injuries and material damage. • Allow the housing, the protective glass and the lamp cool down for approx. 15 min before touching them.

EN

9.1 Maintenance

- Consult the relevant national regulations to determine the type and extent of inspections.
- Adapt inspection intervals to the operating conditions.
- Perform maintenance and repair work in accordance with IEC 60079-17 and IEC 60079-19.

i	Observe the relevant national regulations in the country of use.

During maintenance/overhaul of the device, the following points must be checked:

- Proper function of glass dome and housing,
- Condition of the connection lines,
- Connection of the protective conductor and equipotential bonding,
- Proper function and secure fit of cable entries,
- Seals within the cable entries,
- Cleanliness and proper function of the housing interiors (Ex d and Ex e),
- Secure fit of the holding bracket mounting screws,
- Good visual condition of the flameproof joint (dirt or damage)
- Comply with the permissible temperatures (according to EN 60079),
- Intended use and function.

9.2 Repair

	DANGER
EX	Explosion hazard due to improper repair! Non-compliance results in severe or fatal injuries. • Repair work on the devices must be performed only by R. STAHL Schaltgeräte GmbH.

EN

9.3 Returning the device

- Only return or package the devices after consulting R. STAHL!
  Contact the responsible representative from R. STAHL.

R. STAHL's customer service is available to handle returns if repair or service is required.

- Contact customer service personally.

or

- Go to the r-stahl.com website.
- Under "Support" > "RMA" > select "RMA-REQUEST".
- Fill out the form and send it.
  You will automatically receive an RMA form via email. Please print this file off.
- Send the device along with the RMA form in the packaging to
  R. STAHL Schaltgeräte GmbH (refer to chapter 1.1 for the address).

10 Cleaning

	DANGER
	Explosion hazard due to damaged joints when cleaning! Non-compliance results in severe or fatal injuries. • Only treat corroded joints with high-quality, chemical cleaning agents (e.g. with Esso reducing oils, type Vassol or similar products). • Do not use any abrasives or wire brushes for cleaning. • Do not apply any colour.

- To avoid electrostatic charging, the devices located in potentially explosive areas may only be cleaned using a damp cloth.
- When cleaning with a damp cloth, use water or mild, non-abrasive, non-scratching cleaning agents.
- Do not use aggressive detergents or solvents.
- Clean the flameproof joints regularly with an acid-free grease that is compatible with aluminium.

EN

11 Disposal

- Observe national and local regulations and statutory regulation regarding disposal.
- Separate materials when sending it for recycling.
- Ensure environmentally friendly disposal of all components according to the statutory regulations.
- Removal of components at the end of their service life:
  - Remove and open luminaires according to the operating instructions.
  - Disconnect cables from the LED PCB and control gear.
  - Control gear: Loosen the mounting screws and remove the device.
  - LED PCB: Push the barbs on the underside together using suitable pliers and remove the PCB upwards.

12 Accessories and Spare parts

NOTICE
Malfunction or damage to the device due to the use of non-original components. Non-compliance can result in material damage. • Use only original accessories and spare parts from R. STAHL Schaltgeräte GmbH.

i	For accessories and spare parts, see data sheet on our homepage r-stahl.com.

EU-Konformitätserklärung
EU Declaration of Conformity
Déclaration de Conformité UE

STAHL

R. STAHL Schaltgeräte GmbH • Am Bahnhof 30 • 74638 Waldenburg, Germany

erklärt in alleiniger Verantwortung / *declares in its sole responsibility / déclare sous sa seule responsabilité,*

dass das Produkt: *that the product:* *que le produit:*	**Universalstrahler LED** *Universal spotlight LED* *Projecteur universel LED*
Typ(en), *type(s), type(s):*	**6050/6.**

mit den Anforderungen der folgenden Richtlinien und Normen übereinstimmt.
is in conformity with the requirements of the following directives and standards.
est conforme aux exigences des directives et des normes suivantes.

Richtlinie(n) / *Directive(s) / Directive(s)*	**Norm(en)** / *Standard(s) / Norme(s)*
2014/34/EU **ATEX-Richtlinie** *2014/34/EU* *ATEX Directive* *2014/34/UE* *Directive ATEX* (OJ L 96, 29/03/2014, p. 309–356)	EN IEC 60079-0:2018 EN 60079-1:2014 EN IEC 60079-7:2015/A1:2018 EN 60079-28:2015 EN 60079-31:2014
Kennzeichnung, *marking, marquage:*	**II 2 G Ex db eb op is IIC T4/T6 Gb** **II 2 D Ex tb op is IIIC T110°C/T80°C Db** CE 0158
EU-Baumusterprüfbescheinigung: *EU Type Examination Certificate:* *Attestation d'examen UE de type:*	**EPS 17 ATEX 1181** (Bureau Veritas Consumer Produkt Services GmbH, Businesspark A96, 86842 Türkheim, Germany)
Produktnormen nach Anhang II ATEX (aus Niederspannungsrichtlinie): *Product standards according to Annex II ATEX (from Low Voltage Directive):* *Normes de produits selon l'annexe II ATEX (de la Directive Basse Tension)*	EN IEC 60598-1:2021+A11:2022 EN IEC 60598-2-22:2022 EN 62471:2008
2014/30/EU **EMV-Richtlinie** *2014/30/EU* *EMC Directive* *2014/30/UE* *Directive CEM* (OJ L 96, 29/03/2014, p. 79–106)	EN IEC 55015:2019+A11:2020 EN 61547:2009 EN 61000-3-2:2014 EN 61000-3-3:2013
2011/65/EU & (EU) 2015/863 RoHS-Richtlinien *2011/65/EU & (EU) 2015/863 RoHS Directives* *2011/65/UE & (UE) 2015/863 Directives RoHS* (OJ L 174, 1/07/2011, p. 88–110 & OJ L 137, 04/06/2015, p. 10-12)	EN IEC 63000:2018

Unterzeichnet für und im Namen von: / *signed for and on behalf of: / signé pour et au nom de:*

R. STAHL Schaltgeräte GmbH

Waldenburg, 2024-03-05

Ort und Datum
Place and date
Lieu et date

Steffen Holtz
Leiter Entwicklung Leuchten und Signalgeräte
Director R&D Lighting and Signalling
Directeur R&D Eclairage & Appareils de signalisation

Daniel Groth
Leiter Qualitätsmanagement Systeme
Director Quality Management Systems
Directeur Systèmes de Management de la Qualité