# Lighting

## Compact light fitting Emergency luminaire
## With battery
## 6109/111-0101-160-0111-31-1850-A11 Art. No. 287799



- Suitable for wall, ceiling and suspended mounting
- Operating modes: Continuous mode, continuous mode with switchable emergency lighting
- With function and rated operating time test with optional DALI technology
- Large recognition range d ≥ 30 m
- Emergency exit signs with suspended panel so that they can be read from both sides
- Lightweight, robust and compact design

MY R. STAHL **6109A**

C-LUX 6109 series compact emergency luminaires can be used for emergency lighting, as well as for indication or escape route luminaires.

## Technical Data

| | |
|---|---|
| **Explosion Protection** | |
| Area of application | European Union (ATEX)<br>IECEx |
| Ex version | Yes |
| Application range (zones) | 1, 2, 21, 22 |
| IECEx gas explosion protection | Ex db eb ib op is IIC T4 Gb |
| IECEx dust explosion protection | Ex tb op is IIIC T100 °C Db |
| ATEX gas explosion protection | II 2 G Ex db eb ib op is IIC T4 Gb |
| ATEX dust explosion protection | II 2 D Ex tb op is IIIC T100 °C Db |
| Certificates and approvals | ATEX<br>IECEx |
| Certificates | ATEX (IBE), IECEx (IBE), Polen (CNBOP) |
| Declaration of conformity | ATEX (EUK) |
| **Electrical Data** | |
| Frequency range | 50 – 60 Hz |
| Battery version | NiCd battery, gas-tight |
| Battery operating voltage | 6 V |
| Battery capacity | 2.2 Ah |
| Self-test function | Function and battery duration test |
| LED service life | L90B50 ≥ 100 h |
| AC operating voltage | 100 ... 240 V |
| Control interface | without |
| **Lighting Data** | |
| Lamp | LED |
| Luminous flux | 0 lm |
| Operating time | 1.5 / 3h emergency lighting operation |
| Emergency light output | 25% – 3 h<br>50% – 1.5 h |

| | |
|---|---|
| **Ambient Conditions** | |
| Ambient temperature | -30°C ... +50°C Note: Through wiring Max. 3x16 A<br>-30°C ... +60°C Note: Through wiring 2 Max. 3x10 A |
| **Mechanical Data** | |
| IP degree of protection (IEC 60598) | IP66 / IP67 |
| Class | I |
| Enclosure material | Thermoset |
| Enclosure colour | Light grey (RAL 7035) |
| Cover material | Polycarbonate |
| Sealing material | Silicone |
| Silicone-free content | Without influence on paint wetting |
| Pane material | PMMA |
| Installed terminal strip | PE + N + L1 + L2 + L3 + L" |
| Max. solid connection terminals | 6 mm² |
| Max. finely stranded connection terminals | 4 mm² |
| Type of connection cable | Finely stranded<br>Solid |
| Size | 1 |
| Width | 185 mm |
| Height | 240 mm |
| Length | 440 mm |
| Impact strength (IEC 62262) | IK08 |
| Disconnection of the luminaire | No |
| Weight | 4 kg |
| Weight | 8.82 lb |
| **Components** | |
| Variant | Escape route to the right Single-sided |
| Threaded plate | Plastic |
| Ballast | 6046/311-841-060 NLE standard |
| Through wiring | Loop in/loop out |
| Drilled holes | 3 x M25 |
| Cable glands and entries | 2 x M25 Ø 7 … 17 mm |
| Stopping plugs | 2 x M25 x 1.5 |
| Stopping plug material | Polyamide, black |
| Breather | without |
| Accessories | Provided |

**Dimensional Drawings (All Dimensions in mm [inches]) – Subject to Alterations**

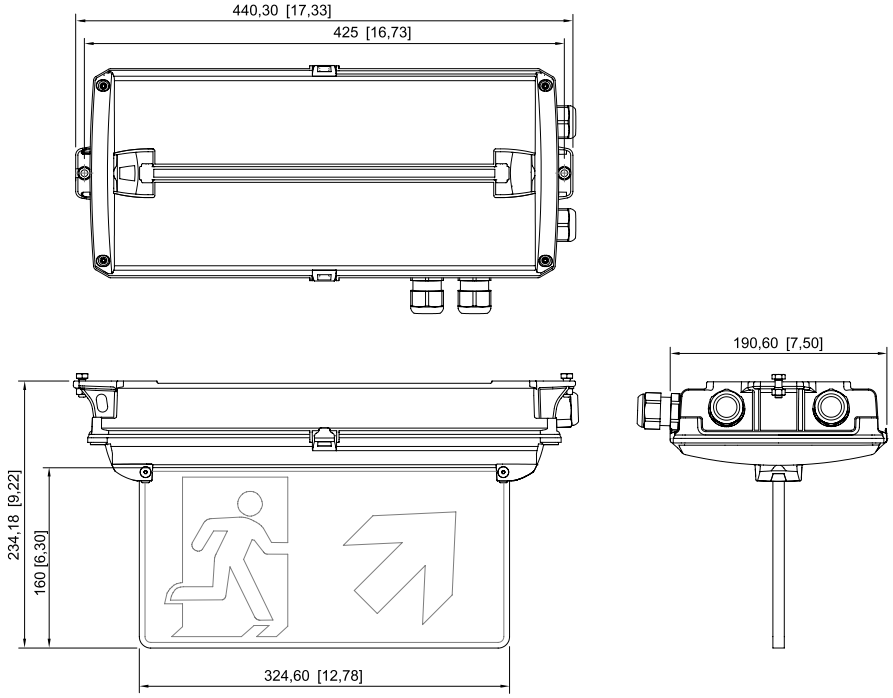


with escape sign

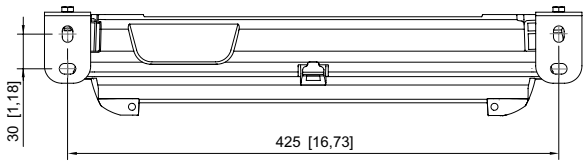


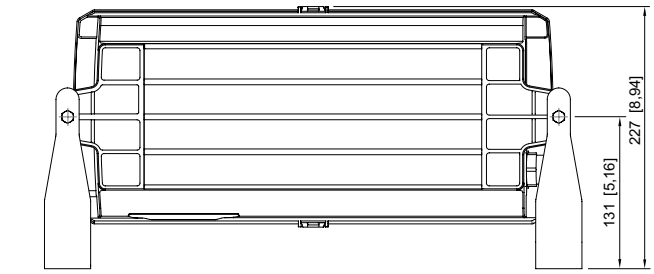


with mounting brackets

# Lighting

Compact light fitting Emergency luminaire
With battery
6109/111-0101-160-0111-31-1850-A11 Art. No. 287799

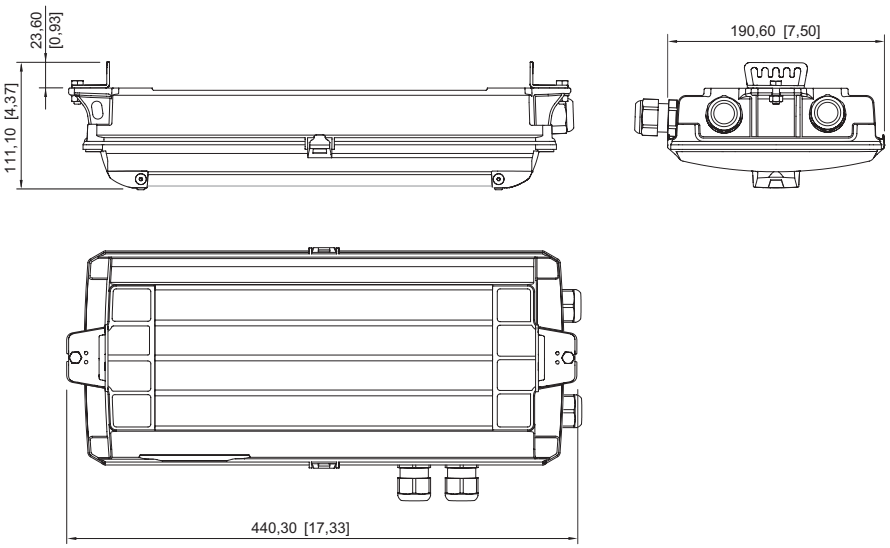


for rope/chain mounting

## Accessories

| Breather | | Art. No. |
|---|---|---|
| 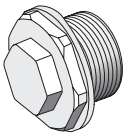 | Thread: M20 x 1.5 (1 piece); for installation in light fittings; made from stainless steel; without jam nut | 323702 |
| | Thread: M25 x 1.5 (1 piece); for installation in light fittings; made from stainless steel; without jam nut | 296608 |
| 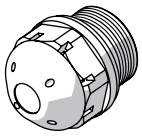 | M25 x 1.5 in order to avoid condensate formation | 115738 |

| Fastening set | | Art. No. |
|---|---|---|
| 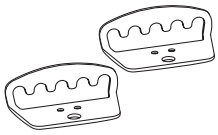 | for chain/rope assembly | 275407 |
| 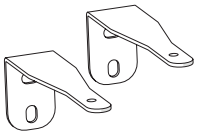 | for wall mounting | 275408 |

| Light panel | | Art. No. |
|---|---|---|
|  | Escape route double sided | 275872 |
|  | Escape route, down | 274776 |

# Lighting

Compact light fitting Emergency luminaire
With battery
6109/111-0101-160-0111-31-1850-A11 Art. No. 287799

| Light panel | | Art. No. |
|---|---|---|
|  | Escape route, up | 274758 |
|  | Escape route, down double-sided | 274780 |
|  | Escape route, up double-sided | 274772 |
|  | Escape route, left | 274757 |
|  | Escape route, right | 274775 |
|  | Escape route left/right double-sided | 274773 |
|  | Escape route stairs, down left | 274777 |
|  | Escape route stairs, down right | 274778 |
|  | Escape route stairs, down double-sided | 274779 |
|  | Escape route stairs, up left | 274759 |
|  | Escape route stairs, up right | 274760 |
|  | Escape route stairs, up double-sided | 274771 |
|  | EXIT | 275514 |

## Spare Parts

| Battery set | | Art. No. |
|---|---|---|
| 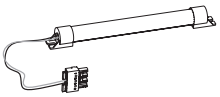 | NiCd battery, gas-tight; 2.2 Ah / 6 V | 273190 |

| Optic | | Art. No. |
|---|---|---|
|  | Diffuser | 274756 |

| Diffusing lens | | Art. No. |
|---|---|---|
|  | Deflection optics | 274781 |

We reserve the right to make alterations to the technical data, dimensions, weights, designs and products available without notice. The illustrations cannot be considered binding.