Installation equipment
Mushroom stay-put button

8602C3-012-B Art. No. 223699

- Pushbutton, mushroom pushbutton, mushroom stay-put button with key lock, mushroom stay-put button, twin pushbutton and illuminated pushbutton, rotary actuator, key-operated switch, potentiometer bezel and indicator lamp bezel
- One axial actuator can actuate up to four Series 8082 contact elements
- Key-operated switches and rotary switches codable at any time as "latching/spring return" or "key not removable"

MY R. STAHL **8602A**

Thanks to their special technical features, the actuators from the 8602/3 series can withstand the most extreme conditions. In addition to the application option for use in ambient temperatures from -60 °C to +70 °C, the IP degree of protection, IP66, is maintained in accordance with EN 60529.
It is also possible to actuate up to four contact elements from the 8082 series with a single axial actuator from the 8602/3 series.
The coding option of the key switches and rotary switches is innovative and one-of-a-kind. Integrated coding allows you to adjust the “latching/spring return” and/or “key not removable” functions at any time without additional accessories. A versatile set of accessories consisting of label holders and locking devices is available.

Technical Data

Explosion Protection	
Application range (zones)	1, 2, 21, 22
IECEx gas certificate	IECEx PTB 13.0047U
IECEx gas explosion protection	Ex eb IIC Gb
IECEx dust certificate	IECEx PTB 13.0047 U
IECEx dust explosion protection	Ex tb IIIC Db
ATEX gas certificate	PTB 13 ATEX 1019 U
ATEX gas explosion protection	Ex II 2 G Ex eb IIC Gb
ATEX dust certificate	PTB 13 ATEX 1019 U
ATEX dust explosion protection	II 2 D Ex tb IIIC Db
UL gas certificate	E182378 V4 S2
Certificate ULus	E182378 V4 S2
Marking ULus	Class I, Zone 1, AEx eb IIC Gb Zone 21, AEx tb IIIC Db
Certificate cUL	E182378V4S2
Marking cUL	Class I, Zone 1, Ex eb IIC Gb Zone 21, Ex tb IIIC Db
Inmetro gas certificate	UL-BR 14.0380U
Inmetro dust certificate	UL-BR 14.0380U
Certificates	ATEX (PTB), Brazil (ULB), Canada / USA (UL), Canada (UL), IECEx (PTB), Korea (KGS), USA (UL)
Functional Safety	
SIL-capable	only with contact elements 8082, 8208/24-15

8602C3-012-B Art. No. 223699

Ambient Conditions	
Ambient temperature	-20 °C ... +60 °C
Ambient temperature	-4 °F ... +140 °F
Storage temperature	-25 °C ... +60 °C
Storage temperature	-13 °F ... +140 °F
Use at the height of	< 2000 m
Max. operating altitude	2000 m
Degree of pollution	3
Mechanical Data	
Degree of protection (IP)	IP66
Note on degree of protection	According to IEC/EN 60529
Enclosure material	Polyamide
Silicone-free	Yes
Seal	Standard
Assembly	012
Diameter	39 mm
Service life, min.	10^5 actuations
Impact strength (IEC 60079)	7 J
Impact strength (IEC 62262)	min. IK08
Colour	Black
Mounting	Thread type
Packaging unit	1
Weight	50 g
Weight	0.11 lb
Mounting / Installation	
Mounting type	Front panel mounting
Tightening torque	3 N · m
Tightening torque lbf in	26.55 lbf in

Technical Drawings – Subject to Alterations

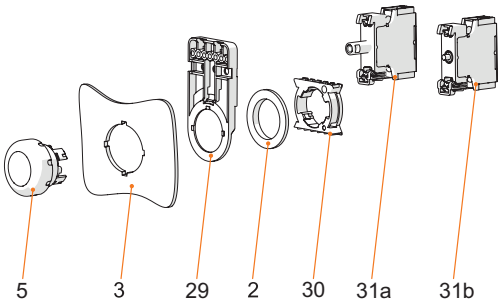

Front installation mounting with Series 8010/6 indicator lamp and Series 8082/3 contact element
Key
2 = jam nut (order no. 205592)
3 = installation wall (wall thickness max. 5 mm [0.197 inch])
5 = actuator with seal
29 = support for cable duct (optional) (order no. 248673)
30 = adaptor (order no. 227038)
31a = built-in element: LED element 8010/6
31b = built-in element: Contact element 8082/3

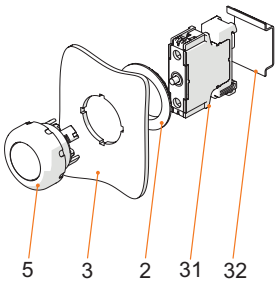

Mounting rail mounting
Key
2 = jam nut (order no. 205592)
3 = installation wall (wall thickness max. 5 mm [0.197 inch])
5 = actuator with seal
31 = built-in element
32 = TS35 mounting rail

8602C3-012-B Art. No. 223699

Dimensional Drawings (All Dimensions in mm [inches]) – Subject to Alterations

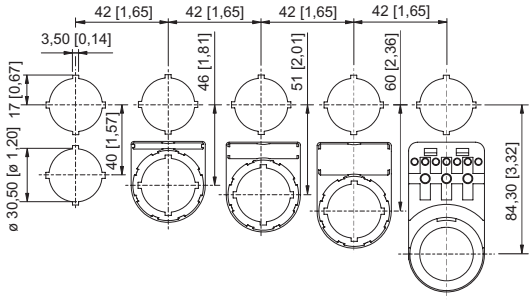

Cut-out with/without additional designation plate

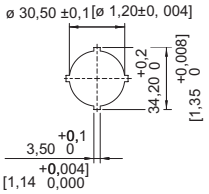

Single punch pattern

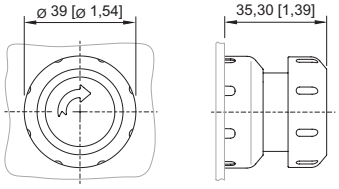

8602/3-010 red/yellow mushroom stay-put button
8602/3-012 black/black mushroom stay-put button
Actuator with axial actuation

Accessories

Locking devices		Art. No.
	8602C3-752 for actuated mushroom stay-put button BG010, BG012	244869
	8602C3-756 for actuated mushroom stay-put button BG010, BG012	244873
	8602C3-758 for not actuated mushroom stay-put button BG08, BG010, BG012	244874

Closing part		Art. No.
	8602C3-733-B for closing unused holes in cover, dia. 30.5 mm, NBR	244306

Protective collar		Art. No.
	8602C3-751 plastic/red for mushroom stay-put button with key lock/mushroom stay-put button dia. 39 BG006, BG009, BG010, BG012	257707
	8602C3-751 plastic/yellow for mushroom stay-put button with key lock/mushroom stay-put button dia. 39 BG006, BG009, BG010, BG012	257708

8602C3-012-B Art. No. 223699

Spare Parts

Contact element		Art. No.
	for NC front installation	240898
	for NO contact front installation	240899

Insert discs for label holder		Art. No.
	One-line Plain Material: PVC Colour: White Self-adhesive	238271
	Two-line Plain Material: PVC Colour: White Self-adhesive	238272
	Three-line Plain Material: PVC Colour: White Self-adhesive	238273

Designation plates set for BG001, BG023		Art. No.
	The button label set contains nine labels 6x blank disc without text in red, green, white, blue, yellow and black 1x red label, text: STOP 1x green label, text: START 1x blue label, text: RESET	321791

Label holder		Art. No.
	Size 1, without insert disc, 1-line label for actuators Ø 39	223566
	Size 2, without insert disc, 1- or 2-line label for actuators Ø 39	223567
	Size 3, without insert disc, 1-, 2- or 3-line label for actuators Ø 39	223568

Special key		Art. No.
	for tightening plastic locking nut	169101

8602C3-012-B Art. No. 223699

Ring nut		Art. No.
	for mounting the actuators	205592

Pressure plates		Art. No.
	Dia. 37 mm Three contact elements	215436
	Dia. 48.5 mm Four contact elements	215437

Holder for front installation		Art. No.
	8602/3 holder for cable duct	248673

Adaptor for front installation		Art. No.
	8602/3 Front installation for indicator lamp series 8010/6 and contact element series 8082/3	227038

We reserve the right to make alterations to the technical data, dimensions, weights, designs and products available without notice. The illustrations cannot be considered binding.

R. STAHL Schaltgeräte GmbH | Am Bahnhof 30 | 74638 WALDENBURG
Tel. +49 7942 943 1700 | +49 7942 943 1777 | Email: sales.de@r-stahl.com | r-stahl.com