Installation equipment

Rotary actuator, small lockable

8602C3-734-B-45H-E08 Art. No. 227391

- Pushbutton, mushroom pushbutton, mushroom stay-put button with key lock, mushroom stay-put button, twin pushbutton and illuminated pushbutton, rotary actuator, key-operated switch, potentiometer bezel and indicator lamp bezel
- One axial actuator can actuate up to four Series 8082 contact elements
- Key-operated switches and rotary switches codable at any time as "latching/spring return" or "key not removable"

MY R. STAHL **8602A**

Thanks to their special technical features, the actuators from the 8602/3 series can withstand the most extreme conditions. In addition to the application option for use in ambient temperatures from -60 °C to +70 °C, the IP degree of protection, IP66, is maintained in accordance with EN 60529.
It is also possible to actuate up to four contact elements from the 8082 series with a single axial actuator from the 8602/3 series.
The coding option of the key switches and rotary switches is innovative and one-of-a-kind. Integrated coding allows you to adjust the “latching/spring return” and/or “key not removable” functions at any time without additional accessories. A versatile set of accessories consisting of label holders and locking devices is available.

Technical Data

Explosion Protection	
Application range (zones)	1, 2, 21, 22
IECEx gas certificate	IECEx PTB 13.0047U
IECEx gas explosion protection	Ex eb IIC Gb
IECEx dust certificate	IECEx PTB 13.0047 U
IECEx dust explosion protection	Ex tb IIIC Db
ATEX gas certificate	PTB 13 ATEX 1019 U
ATEX gas explosion protection	Ex II 2 G Ex eb IIC Gb
ATEX dust certificate	PTB 13 ATEX 1019 U
ATEX dust explosion protection	II 2 D Ex tb IIIC Db
UL gas certificate	E182378 V4 S2
Certificate ULus	E182378 V4 S2
Marking ULus	Class I, Zone 1, AEx eb IIC Gb Zone 21, AEx tb IIIC Db
Certificate cUL	E182378V4S2
Marking cUL	Class I, Zone 1, Ex eb IIC Gb Zone 21, Ex tb IIIC Db
Inmetro gas certificate	UL-BR 14.0380U
Inmetro dust certificate	UL-BR 14.0380U
Certificates	ATEX (PTB), Brazil (ULB), Canada / USA (UL), Canada (UL), IECEx (PTB), Korea (KGS), USA (UL)
Ambient Conditions	
Ambient temperature	-20 °C ... +60 °C
Ambient temperature	-4 °F ... +140 °F

8602C3-734-B-45H-E08 Art. No. 227391

Ambient Conditions	
Storage temperature	-25 °C ... +60 °C
Storage temperature	-13 °F ... +140 °F
Use at the height of	< 2000 m
Max. operating altitude	2000 m
Degree of pollution	3
Mechanical Data	
Version	lockable
Degree of protection (IP)	IP66
Note on degree of protection	According to IEC/EN 60529
Enclosure material	Polyamide
Silicone-free	Yes
Seal	Standard
Assembly	734
Diameter	39 mm
Service life, min.	10^5 actuations
Impact strength (IEC 60079)	7 J
Impact strength (IEC 62262)	min. IK08
Colour	Black
Mounting	Thread type
Designation plate	0/OFF - I/ON
Lockable in	One pos. with one lock
Packaging unit	1
Decription note	0/OFF-I/ON label provided separately. Cylinder lock not enclosed. Other labels must be ordered separately.
Weight	40 g
Weight	0.09 lb
Mounting / Installation	
Mounting type	Front panel mounting
Tightening torque	3 N · m
Tightening torque lbf in	26.55 lbf in

Technical Drawings – Subject to Alterations

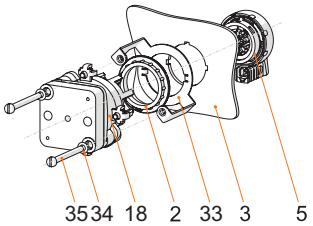

Front installation mounting with Series 8008 control switch
Key
2 = jam nut (order no. 205592)
3 = installation wall (wall thickness max. 2 mm [0.0787 inch])
5 = 8302/3 actuator with seal (4)
18 = 8008/2-. control switch
33 = front installation 8602/3 adaptor for type 8008/2
34 = M4 disc
35 = M4x screw

8602C3-734-B-45H-E08 Art. No. 227391

Dimensional Drawings (All Dimensions in mm [inches]) – Subject to Alterations

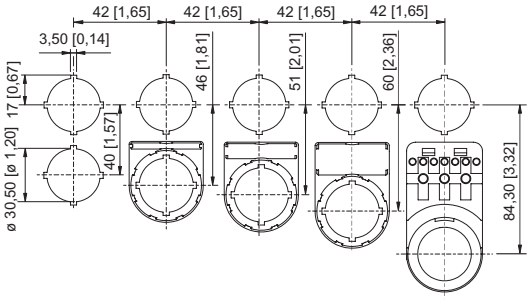

Cut-out with/without additional designation plate

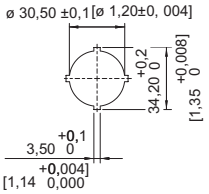

Single punch pattern

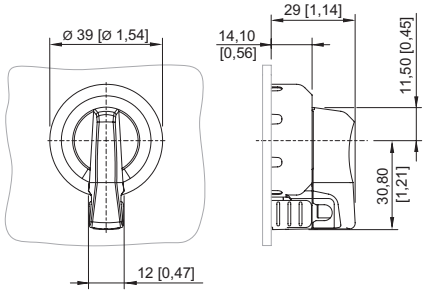

8602/3-734 rotary actuator, lockable using one lock
Actuator with radial actuation

Accessories

Cylinder lock		Art. No.
	for closing (bracket Ø 3)	107115

Closing part		Art. No.
	8602C3-733-B for closing unused holes in cover, dia. 30.5 mm, NBR	244306

Spare Parts

Insert discs for label holder		Art. No.
	One-line Plain Material: PVC Colour: White Self-adhesive	238271
	Two-line Plain Material: PVC Colour: White Self-adhesive	238272
	Three-line Plain Material: PVC Colour: White Self-adhesive	238273

Labels for small BG 732, BG 734 rotary actuator		Art. No.
	Dia. 30.8 0/OFF I/ON	227489

8602C3-734-B-45H-E08 Art. No. 227391

Labels for small BG 732, BG 734 rotary actuator		Art. No.
	Dia. 30.8 0 I	227490
	Dia. 30.8 I 0 II	227491
	Dia. 30.8 0 I	227492
	Dia. 30.8 MANUAL 0 AUTO	227494
	Dia. 30.8 OFF ON	269983
	Dia. 30.8 AUTO 0 MANUAL ON	269984
	Dia. 30.8 AUTO 0 MANUAL	269985

Labels for small BG 732, BG 734 rotary actuator and BG 726, BG 727 axial rotary actuator		Art. No.
	Dia. 30.8 Plain	227495

Label set for BG732		Art. No.
	The label set contains three dia. 30.8 mm labels 1x label with text HAND-0-AUTO 1x label with text LOCAL-REMOTE 1x label blank	321792

Label holder		Art. No.
	Size 1, without insert disc, 1-line label for actuators Ø 39	223566

8602C3-734-B-45H-E08 Art. No. 227391

Label holder		Art. No.
	Size 2, without insert disc, 1- or 2-line label for actuators Ø 39	223567
	Size 3, without insert disc, 1-, 2- or 3-line label for actuators Ø 39	223568

Special key		Art. No.
	for tightening plastic locking nut	169101

Ring nut		Art. No.
	for mounting the actuators	205592

Adaptor for front installation		Art. No.
	8602/3 front installation for control switch of Series 8008	260081

We reserve the right to make alterations to the technical data, dimensions, weights, designs and products available without notice. The illustrations cannot be considered binding.