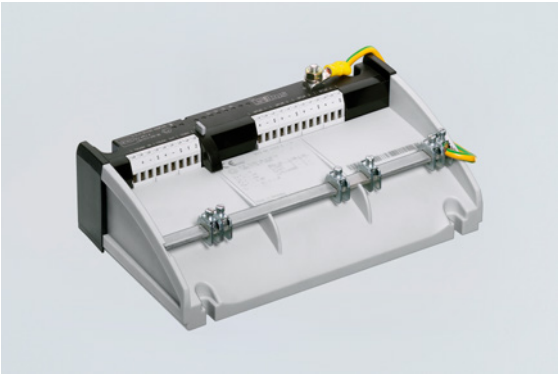

- For connecting four fieldbus devices in Zone 1
- Operated using High Power Trunk concept
- Reduced start-up current thanks to power management and short-circuit limiting with disconnection

WebCode **9411B**

9411/11 series Ex e field device couplers for Zone 1 can be used for interference-free connection of four FOUNDATION Fieldbus H1 or PROFIBUS PA field devices on the High Power Trunk. The spurs with type of protection e can be used for fieldbus devices in Zone 1 (d, q, m) and are protected by a short-circuit limiting function.
The integrated power management minimises start-up and short-circuit currents.
Available with screw terminals or spring clamp terminals.

	NEC® 500 CEC Appendix J					
	Class I		Class II		Class III	
Division	1	2	1	2	1	2
Ex interface		•		•		•
Installation in		•		•		•

	CEC Section 18 NEC® 505			NEC® 506		
	Class I					
Zone	0	1	2	20	21	22
Ex interface		•	•		•	•
Installation in		•	•		•	•

	IECEx / ATEX					
Zone	0	1	2	20	21	22
Ex interface		•	•			•
Installation in		•	•			•

Selection Table

Product Description	ISbus fieldbus technology Field device coupler			
Number of channels	Connection type	Product Type	Art. No.	Weight lb
4	Screw terminal	**9411/11-210-30**	161849	2.03

Field enclosures in polyester or stainless steel: customer specific solutions on request

Technical Data

Explosion Protection	
USA certificate FM	3026646
CAN certificate FM	3026646C
USA gas explosion protection FM	Class I, Div. 2, Groups A,B,C,D; Class I, Zone 1, AEx m e IIC, T4
USA marking FM	NI, CL I, DIV 2, GP A,B,C,D; CL I, ZONE 1, AEx m e IIC; T4 at Ta = 75 °C; SEE DOC. 9411 6 031 002 1
CAN gas explosion protection FM	Class I, Div. 2, Groups A,B,C,D; Class I, Zone 1, Ex m e IIC, T4
CAN marking FM	NI, CL I, DIV 2, GP A,B,C,D; CL I, ZONE 1, Ex m e IIC; T4 at Ta = 75 °C; SEE DOC. 9411 6 031 002 1
IECEx gas explosion protection	Ex mb e IIC T4 Gb
Certificates	ATEX (BVS), Brazil (ULB), Canada (FM), EAC (Sertium), IECEx (BVS), International (FF), USA (FM)

Ex e Field Device Coupler 4 Spurs

Series 9411/11

Technical Data

Auxiliary Power	
Power dissipation max.	1.1 W
Notes	Auxiliary power is not necessary, the field device coupler will be supplied by the trunk
Input	
Voltage range Trunk	9 – 32 V
Output	
Output current	0 mA ... 41 mA; per spur
Output voltage	Min. 10 V at 41 mA
Ambient Conditions	
Ambient temperature °F	-40°F ... +167°F
Ambient temperature °C	-40 °C ... +75 °C
Mechanical Data	
Field enclosure	Without, DIN rail mounting

Dimensional Drawings on the Internet r-stahl.com

Technical Drawings – Subject to Alterations

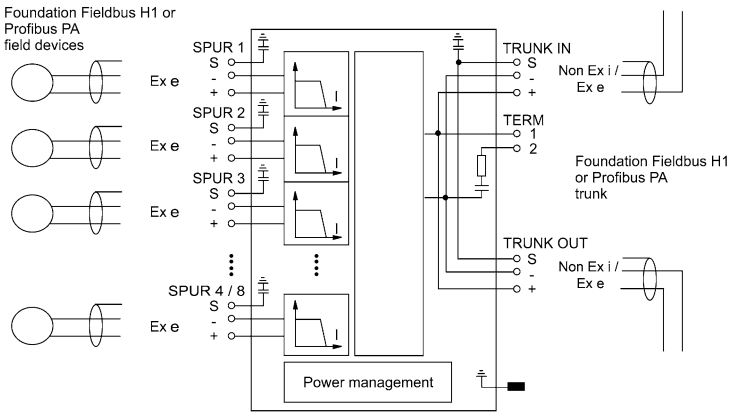

Connection diagram

Accessories

Figure	Description	Art. No.	Weight lb
Fieldbus Wizard Engineering Tool			
	Engineering tool for segment design of Foundation Fieldbus or Profibus PA fieldbus installations Download under www.fieldbus-solutions.info	–	–
Grounding bar set for 4 Spurs			
	Grounding bar 9411 spring terminal strap with 6 terminals	202774	0.28

Dimensional Drawings (All Dimensions in mm [inches]) – Subject to Alterations

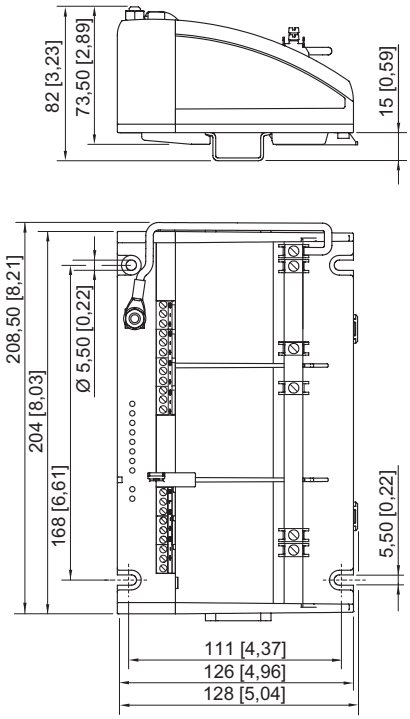

Field Device Coupler, 4 Spurs, without enclosure