Safety Switch
Series 7537/2

12023E00

- Clear assignment
  - safe technology
  - easy installation
- Intelligent structure
  - only one rotary actuator for frequency-controlled drives
  - ≥ 20 ms leading auxiliary contact for safe motor disconnection
- Forced opening of the main contacts (load break switch)
- Can be locked with 3 padlocks in 0-position
- High level of corrosion resistance in external components

Safety switches ensure the obligatory isolation of electrical power during cleaning, maintenance and repair of the equipment. Other methods of isolation, e.g. removal of fuses or disconnection of motors, which require qualified electricians, are unnecessary.

	ATEX					
Zone	0	1	2	20	21	22
For use in						x

WebCode 7537A

Safety Switch
Series 7537/2

Selection Table

Version	Schematic	Order number	Weight kg
7537/2-3.. 3-pole	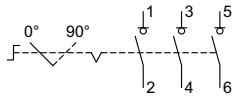 15581E00	**7537/2-310**	25.640
		7537/2-309 EMV	17.060
		7537/2-309	14.300
		7537/2-308 EMV	17.060
		7537/2-308	12.800
		7537/2-307 EMV	13.140
		7537/2-307	12.300
		7537/2-306 EMV	13.140
		7537/2-306	11.900
		7537/2-305 EMV	3.500
		7537/2-305	3.360
		7537/2-304 EMV	3.500
		7537/2-304	3.360
		7537/2-303 EMV	1.800
		7537/2-303	1.800
		7537/2-302	1.800
		7537/2-311 EMV	28.260
		7537/2-311	28.260
		7537/2-310 EMV	28.260
7537/2-6.. 6-pole	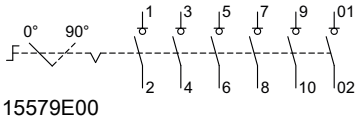 15579E00	**7537/2-609**	13.500
		7537/2-607	11.900
		7537/2-605 EMV	5.560
		7537/2-605	4.850
		7537/2-604 EMV	5.450
		7537/2-604	4.800
		7537/2-603 EMV	3.050
		7537/2-603	2.450
Auxiliary contacts see technical data			

Explosion Protection

Explosion protection	
Europe (ATEX)	
Dust	Ⓔx II 3 D Ex tD A22 IP66 T90 °C

Technical Data

Version	**7537/2-603 7537/2-603 EMC 6-pole, 32 A**	**7537/2-604 7537/2-604 EMC 6-pole, 63 A**	**7537/2-605 7537/2-605 EMC 6-pole, 100 A**
	690 V	690 V	690 V
Rated operational current	32 A	60 A	88 A
Rated operational frequency	50 Hz	50 Hz	50 Hz
Short circuit protection with back-up fuse	35 A gG	80 A gG	100 A gG
Conductor connection			
Connection cross-section			
solid	1 x 1 ... 6 mm^2	1 x 2.5 ... 35 mm^2	1 x 2.5 ... 35 mm^2
Stranded	2 x 1 ... 6 mm^2	2 x 2.5 ... 16 mm^2	2 x 2.5 ... 16 mm^2
Finely stranded with core end sleeve acc. to DIN 46228	1 x 0.75 ... 4 mm^2 2 x 0.75 ... 4 mm^2	1 x 1.5 ... 25 mm^2 2 x 1.5 ... 10 mm^2	1 x 1.5 ... 25 mm^2 2 x 1.5 ... 10 mm^2
Cable entry			
Stopping plug	1 x 8290/3-M25, 2 x 8290/3-M32	1 x 8290/3-M25, 2 x 8290/3-M40	1 x 8290/3-M25, 2 x 8290/3-M50
Cable gland			

Safety switch	Cable gland	Cable dia. range
7537/2-603	1 x 8161/5-M25	7 ... 17 mm
	2 x 8161/5-M32	9 ... 21 mm
7537/2-604	1 x 8161/5-M25	7 ... 17 mm
	2 x 8161/5-M40	16 ... 28 mm
7537/2-605	1 x 8161/5-M25	7 ... 17 mm
	2 x 8161/5-M50	23 ... 35 mm

Note	For tightening torques, please refer to the operating instructions of the components.
Degree of protection	IP66 acc. to IEC/EN 60529
Circuit diagram	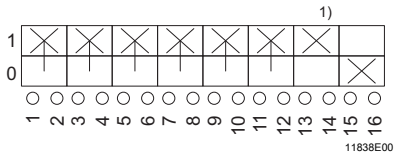

1) Load-shedding contact (delayed ON, leading OFF, according to IEC/EN 60947-1)

Auxiliary contacts			
Rated operational current	AC-15	230 V	6 A
	DC -13	125 V	1,1 A
		250 V	0.55 A
Rated constant current	10 A		
Short-circuit protection			
With fuse	10 A gG		
Control circuit reliability	< 1 failure per 100,000 switching operations at 24 V DC, 10 mA		

E7

Technical Data

Version	**7537/2-607** **6-pole, 160 A** 690 V	**7537/2-609** **6-pole, 250 A**
Rated operational current	160 A	240 A
Rated operational frequency	50 Hz	
Short circuit protection with back-up fuse	160 A gG	
Conductor connection		
Connection cross-section		
solid	1 x 10 ... 16 mm^2	1 x 4 ... 16 mm^2
Stranded	2 x 6 ... 16 mm^2	2 x 4 ... 16 mm^2
Finely stranded with core end sleeve acc. to DIN 46228	1 x 25 ... 70 mm^2 2 x 25 mm^2	1 x 25 ... 185 mm^2 2 x 25 ... 70 mm^2
Cable entry		
Stopping plug	– –	1 x 8290/3-M25
Cable gland		

Safety switch	Cable gland	Cable dia. range
7537/2-607	1 x 8161/5-M25	7 ... 17 mm
	2 x 8161/5-M50	16 ... 35 mm
7537/2-609	1 x 8161/5-M25	7 ... 17 mm
	2 x 8161/5-M63	28 ... 48 mm

Note	For tightening torques, please refer to the operating instructions of the components.
Degree of protection	IP66 acc. to IEC/EN 60529
Circuit diagram	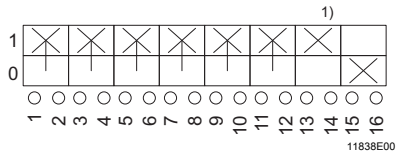

1) Load-shedding contact (delayed ON, leading OFF, according to IEC/EN 60947-1)

Auxiliary contacts

NO contact: NO contact opens approx. 20 ms before opening of the main contacts

Rated operational current:

AC-15	115 / 230 V	4 A
	400 V	2 A
	500 V	1 A
DC -13	24 V	3 A
	42 V	1.5 A
	60 V	0.8 A
	110 V	0.5 A
	220 V	0.2 A

Conventional thermal current I_{th}	4 A
Rated working voltage	500 V AC / 220 V DC
Short-circuit protection	
With fuse	10 A gG
With miniature circuit breaker	FAZ-B6
Conductor connection	
Connection cross-section	
Solid or finely stranded with end covering sleeve	1 x 0.75 ... 2.5 mm^2 2 x 0.75 ... 2.5 mm^2

Technical Data

Version	7537/2-302 3-pole, 25 A 690	7537/2-303 7537/2-303 EMC 3-pole, 32 A 690	7537/2-304 7537/2-304 EMC 3-pole, 63 A 690	7537/2-305 7537/2-305 EMC 3-pole, 100 A 690
Rated operational current	25 A	32 A	63 A	98 A
Rated operational frequency	50 Hz	50 Hz	50 Hz	50 Hz
Short circuit protection with back-up fuse	25 A gG	50 A gG	80 A gG	100 A gG
Conductor connection				
Connection cross-section				
solid	1 x 1.5 ... 6 mm^2	1 x 1.5 ... 6 mm^2	1 x 2.5 ... 35 mm^2	1 x 2.5 ... 35 mm^2
Stranded	2 x 1.5 ... 6 mm^2	2 x 1.5 ... 6 mm^2	1 x 2.5 ... 10 mm^2	1 x 2.5 ... 10 mm^2
Finely stranded with core end sleeve acc. to DIN 46228	1 x 1 ... 4 mm^2 2 x 1 ... 4 mm^2	1 x 1 ... 4 mm^2 2 x 1 ... 4 mm^2	1 x 1.5 ... 25 mm^2 2 x 1.5 ... 6 mm^2	1 x 1.5 ... 25 mm^2 2 x 1.5 ... 6 mm^2

Cable entry

Cable gland

Safety switch	Cable gland	Cable dia. range
7537/2-302 7537/2-303	1 x 8161/5-M25	7 ... 17 mm
	2 x 8161/5-M32	9 ... 21 mm
7537/2-304	1 x 8161/5-M25	7 ... 17 mm
	2 x 8161/5-M40	12 ... 28 mm
7537/2-305	1 x 8161/5-M25	7 ... 17 mm
	2 x 8161/5-M50	16 ... 35 mm
7537/2-303 EMC	1 x EMSKE 25	10 ... 17 mm
	2 x EMSKE 35	13 ... 21 mm
7537/2-304 EMC	1 x EMSKE 25	7 ... 17 mm
	2 x EMSKE 40	16 ... 28 mm
7537/2-305 EMC	1 x EMSKE 25	7 ... 17 mm
	2 x EMSKE 50	21 ... 35 mm

Note: For tightening torques, please refer to the operating instructions of the components.

Degree of protection: IP66 acc. to IEC/EN 60529

Circuit diagram

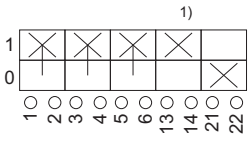

11839E00

1) Load-shedding contact (delayed ON, leading OFF, according to IEC/EN 60947-1)

Auxiliary contacts

Rated operational current	AC-15	230 V	6 A
	DC -13	125 V	1,1 A
		250 V	0.55 A

Rated constant current: 10 A

Short-circuit protection

With fuse: 10 A gG

Control circuit reliability: < 1 failure per 100,000 switching operations at 24 V DC, 10 mA

Conductor connection

Connection cross-section

Finely stranded: 1 x 0.75 ... 2.5 mm^2 / 2 x 0.75 ... 2.5 mm^2

Finely stranded with core end sleeve acc. to DIN 46228: 1 x 0.5 ... 1.5 mm^2 / 2 x 0.5 ... 1.5 mm^2

E7

Technical Data

Version	7537/2-306 7537/2-306 EMC 3-pole, 125 A 690	7537/2-307 7537/2-307 EMC 3-pole, 160 A	7537/2-308 7537/2-308 EMC 3-pole, 200 A	7537/2-309 7537/2-309 EMC 3-pole, 240 A	7537/2-310 7537/2-310 EMC 3-pole, 400 A	7537/2-311 7537/2-311 EMC 3-pole, 630 A
Rated operational current	125 A	160 A	200 A	240 A	400 A	630 A
Rated operational frequency	50 Hz					
Short circuit protection with back-up fuse	125 A gG	160 A gG	200 A gG	240 A gG	400 A gG	630 A gG

Conductor connection

Connection cross-section			
solid	1 x 10 ... 16 mm²	1 x 4 ... 16 mm²	2 x 16 mm²
Stranded	2 x 6 ... 16 mm²	2 x 4 ... 16 mm²	– –
Finely stranded with core end sleeve acc. to DIN 46228	1 x 25 ... 70 mm² 2 x 25 mm²	1 x 25 ... 185 mm² 2 x 25 ... 70 mm²	1 x 35 ... 240 mm² 2 x 25 ... 240 mm²
Terminal screws	4 mm	5 mm	8 mm

Cable entry

Stopping plug	– –		1 x 8290/3-M25
Cable gland			

Safety switch	Cable gland	Cable dia. range
7537/2-306	1 x 8161/5-M25	7 ... 17 mm
7537/2-307 7537/2-308	2 x 8161/5-M63	28 ... 48 mm
7537/2-309	1 x 8161/5-M25	7 ... 17 mm
7537/2-310 7537/2-311	4 x 8161/5-M63	28 ... 48 mm
7537/2-306 EMC 7537/2-307 EMC 7537/2-308 EMC 7537/2-309 EMC	1 x EMSKE 25 2 x EMSKE 63	10 ... 17 mm 32 ... 48 mm
7537/2-310 EMC 7537/2-311 EMC	1 x EMSKE 25 4 x EMSKE 63	10 ... 17 mm 32 ... 48 mm

Note	For tightening torques, please refer to the operating instructions of the components.
Degree of protection	IP66 acc. to IEC/EN 60529
Circuit diagram	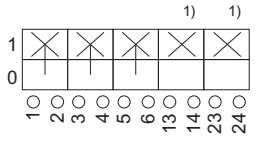 11839E00

1) Load-shedding contact (delayed ON, leading OFF, according to IEC/EN 60947-1)

Auxiliary contacts

NO contact: NO contact opens approx. 20 ms before opening of the main contacts

Rated operational current

AC-15	115 / 230 V	4 A
	400 V	2 A
	500 V	1 A
DC -13	24 V	3 A
	42 V	1.5 A
	60 V	0.8 A
	110 V	0.5 A
	220 V	0.2 A

Conventional thermal current I_{th}: 4 A

Technical Data	
Rated working voltage	500 V AC / 220 V DC
Short-circuit protection	
With fuse	10 A gG
With miniature circuit breaker	FAZ-B6
Conductor connection	
Connection cross-section	
Solid or finely stranded with end covering sleeve	1 x 0.75 ... 2.5 mm² 2 x 0.75 ... 2.5 mm²

Cable glandsTightening torques

	Type 8161		EMSKE
Size of the cable gland	Connection thread [Nm]	Cap nut [Nm]	Connection thread / pressure screw [Nm]
M 12 x 1.5	2.0	2.0	4
M 16 x 1.5	1.8	1.3	4
M 20 x 1.5	2.3	1.5	8
M 25 x 1.5	3.0	2.0	10
M 32 x 1.5	4.5	3.0	20
M 40 x 1.5	11.0	10.0	20
M 50 x 1.5	13.0	12.0	30
M 63 x 1.5	17.0	16.0	40

U-clamp terminal (single, double) with clamping range 1.5 - 6 mm²

Clampable conductor cross-sections:	
finely stranded	4 mm²
solid	6 mm²
Tightening torque	
Bar fastening and conductor connection	3.5 Nm

Dimensional Drawings (all dimensions in mm) - Subject to alterations

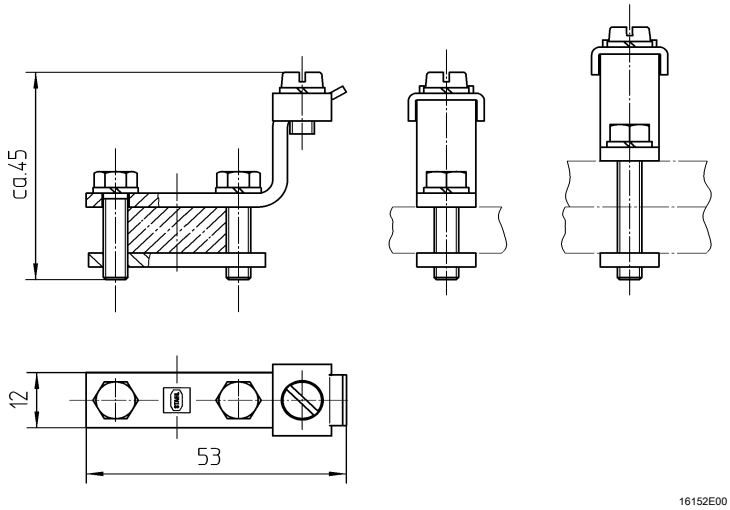

8188 Single U-clamp terminal with clamping range 1.5 - 6 mm²

Busbar terminal for round conductors 50 - 240 mm²

Clampable conductor cross-sections:	
finely stranded	50 to 185 mm²
stranded	50 to 240 mm²
Tightening torque	15 Nm

Dimensional Drawings (all dimensions in mm) - Subject to alterations

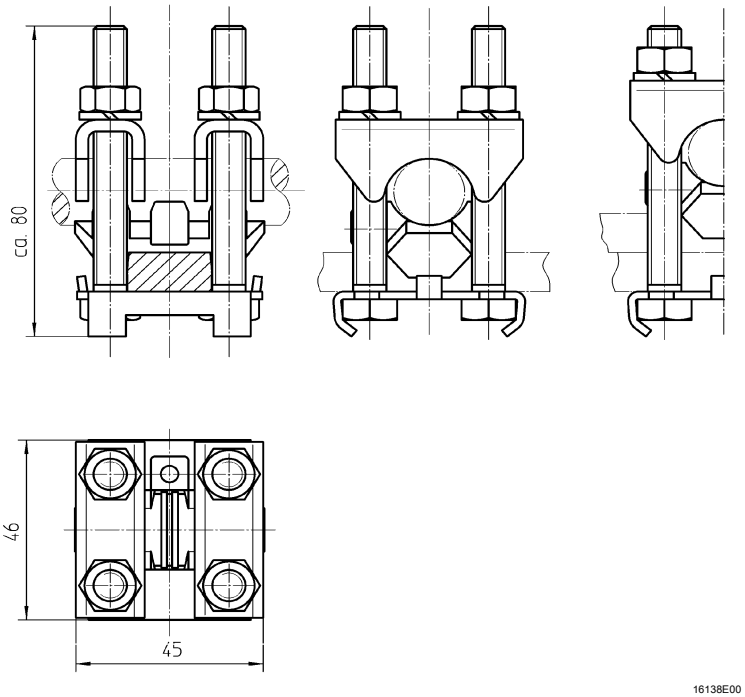

8188 Busbar terminal for round conductors 50 - 240 mm²

PE/PA/N rails

Rail size 1 (10 mm x 3 mm) max. 80 A	
Connection cross-section	1 x 0.75 ... 4 mm² with core end sleeve
	2 x 0.75 ... 4 mm² conductors with the same cross-section and structure
	1 or 2 ring cable lugs M4
	With lug: 1 x 6 ... 10 mm2
	Torque: 1.2 Nm
Rail size 2 (12 mm x 4 mm) max. 110 A	
Connection cross-section	1 x 1.5 ... 10 mm² with core end sleeve
	2 x 1.5 ... 10 mm² conductors with the same cross-section and structure
	1 or 2 ring cable lugs M5
	With lug: 1 x 16 ... 35 mm²
	Torque: 2 Nm
Rail size 3 (18 mm x 6 mm) max. 250 A	
	Lug M6 (5 Nm): 1 x 1.5 ... 10 mm²
	Lug M8 (10 Nm): 1 x 16 ... 70 mm²

Dimensional Drawings (All Dimensions in mm [inches]) - Subject to Alteration

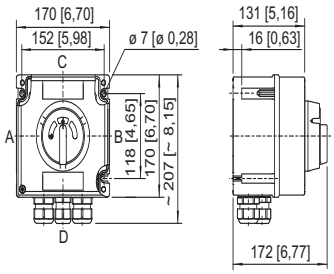

12012E00

7537/2-302: 3-pole, 25 A
7537/2-303 (EMC): 3-pole, 32 A

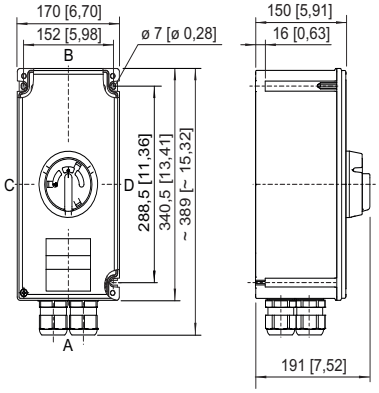

12013E00

7537/2-304 (EMC): 3-pole, 63 A

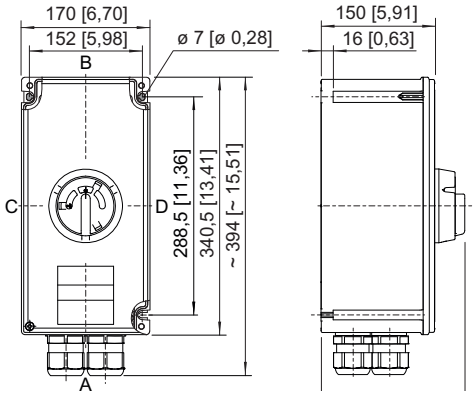

16245E00

7537/2-305 (EMC): 3-pole, 100 A

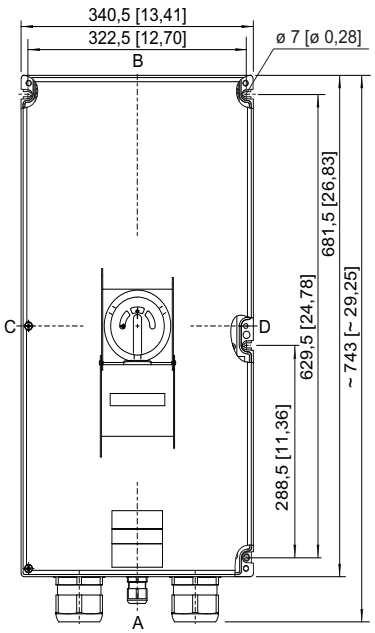

12014E00

7537/2-306 (EMC): 3-pole, 125 A
7537/2-307 (EMC): 3-pole, 160 A

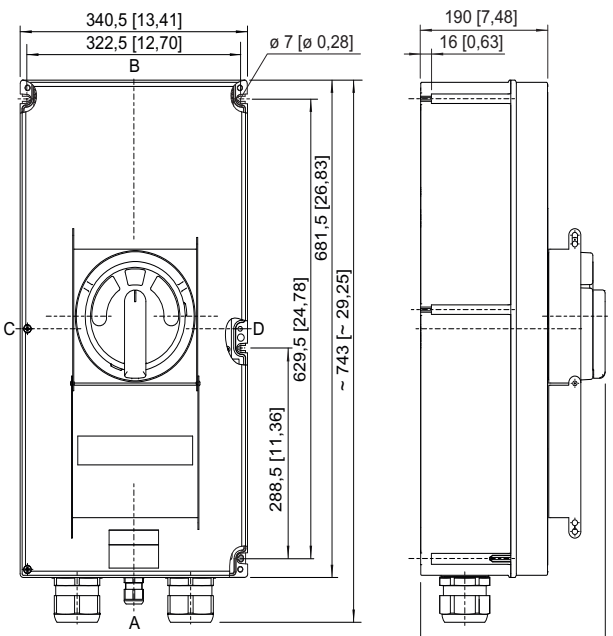

12015E00

7537/2-308 (EMC): 3-pole, 200 A
7537/2-309 (EMC): 3-pole, 250 A

E7

Dimensional Drawings (All Dimensions in mm [inches]) - Subject to Alteration

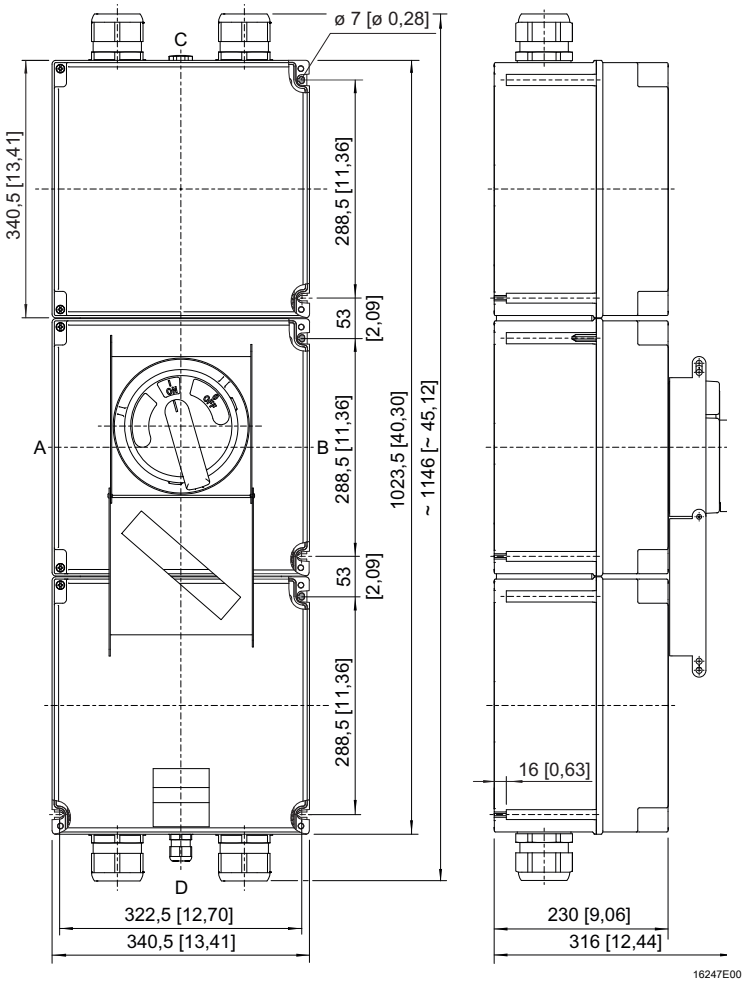

7537/2-310 (EMC): 3-pole, 400 A
7537/2-311 (EMC): 3-pole, 630 A

Dimensional Drawings (All Dimensions in mm [inches]) - Subject to Alteration

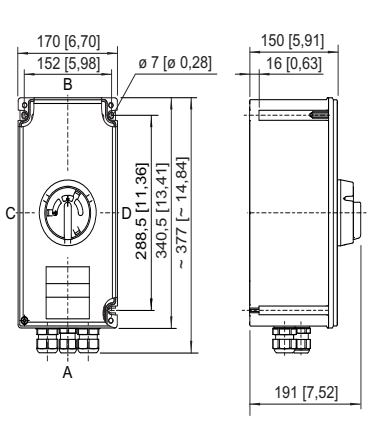

7537/2-603 (EMC): 6-pole, 32 A

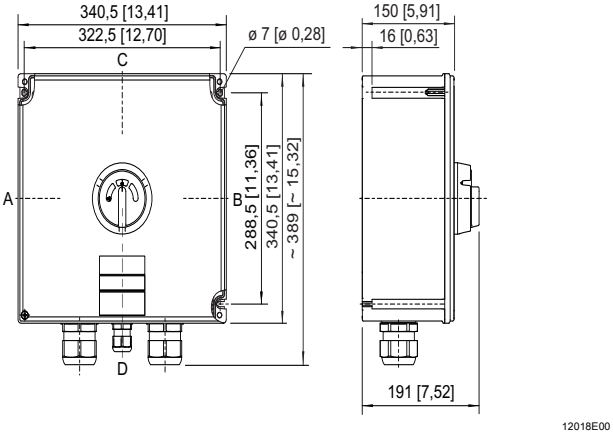

7537/2-604 (EMC): 6-pole, 63 A

Dimensional Drawings (All Dimensions in mm [inches]) - Subject to Alteration

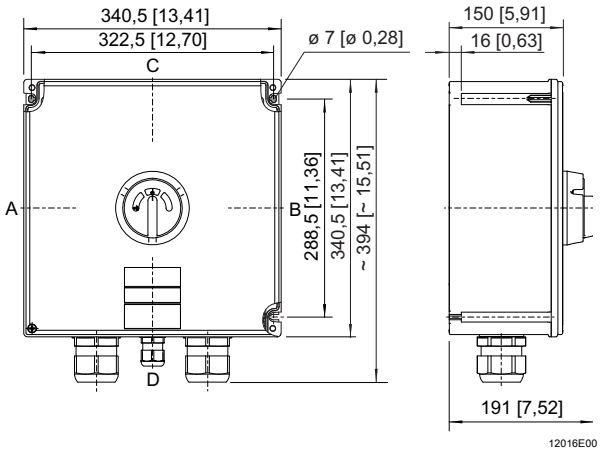

7537/2-605 (EMC): 6-pole, 100 A

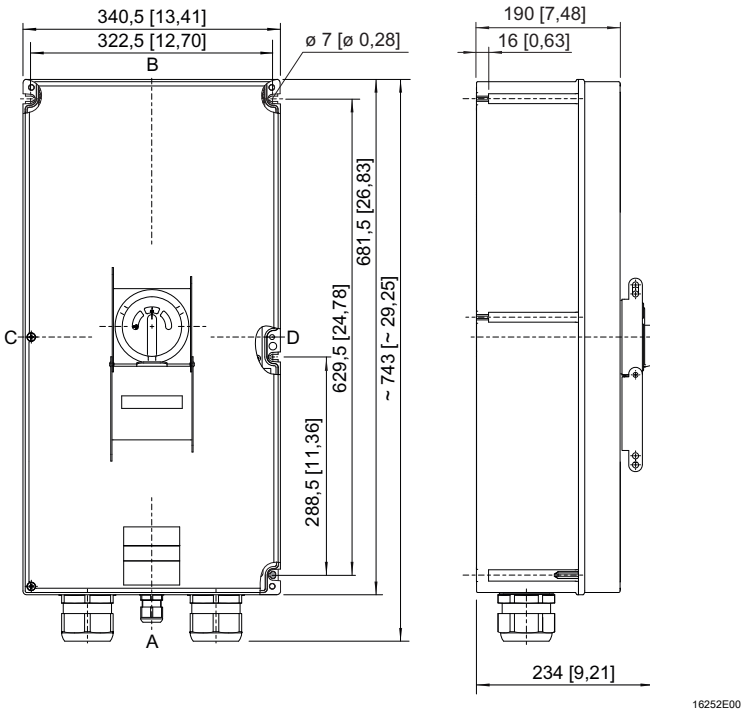

7537/2-607: 6-pole, 160 A

E7

Dimensional Drawings (All Dimensions in mm [inches]) - Subject to Alteration

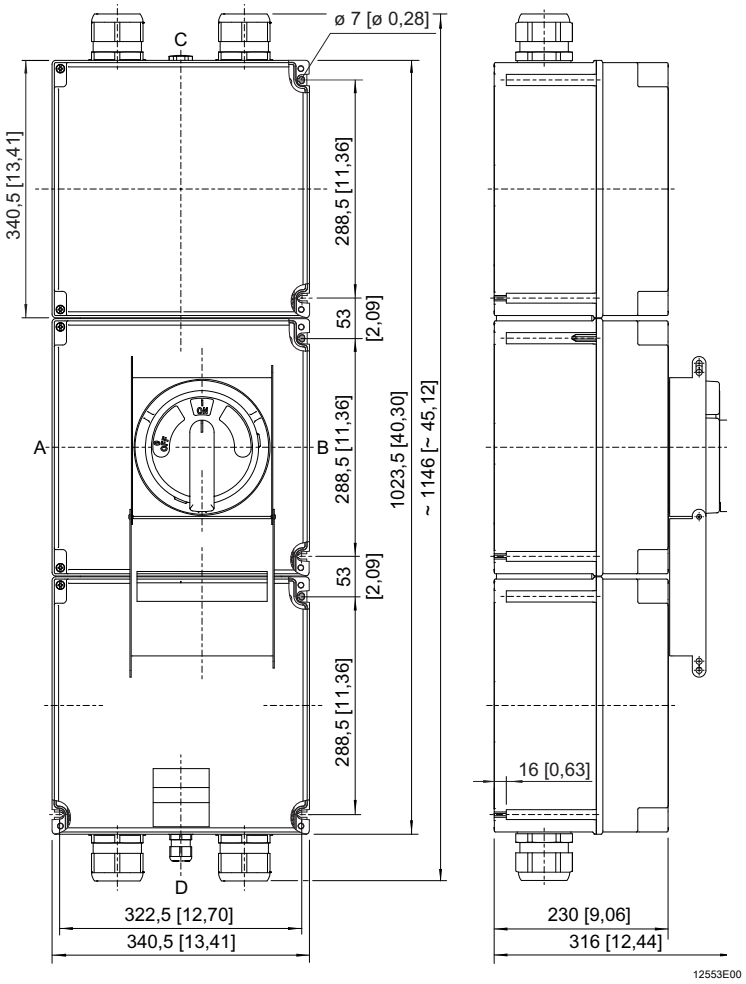

7537/2-609: 6-pole, 250 A

Dimensional Drawings (All Dimensions in mm [inch]) – Subject to Alterations

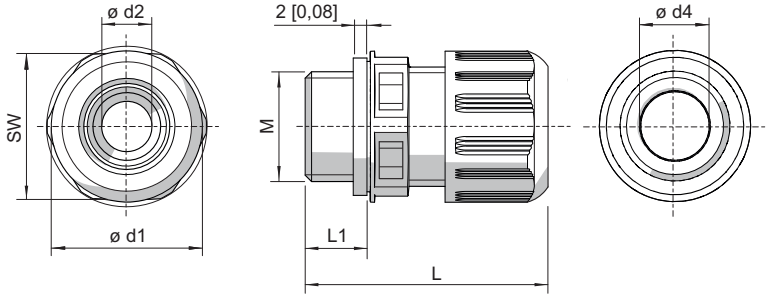

04667E00

Cable glands Series 8161

Cable glands without bend protection (all dimensions in mm [inch])

Thread size	AF	L	L with long thread	L1	L1 as long thread	Cable diameter range	Cable diameter range + RSE*)	d1	d2	d4
M12 x 1.5	16 [0.63]	29 ... 34 [1.14 ... 1.34]	35 ... 40 [1.38 ... 1.57]	9 [0.35]	15 [0.59]	3 ... 6 [0.12 ... 0.24]	1 ... 3 [0.04 ... 0.12]	18 [0.71]	7.3 [0.29]	6.3 [0.25]
M16 x 1.5	20 [0.79]	31 ... 37 [1.22 ... 1.46]	37 ... 43 [1.46 ... 1.69]	9 [0.35]	15 [0.59]	4.5 ... 9 [0.19 ... 0.35]	2 ... 6 [0.08 ... 0.24]	22 [0.87]	10.3 [0.41]	9.3 [0.37]
M20 x 1.5	24 [0.94]	36 ... 43 [1.42 ... 1.70]	41 ... 48 [1.61 ... 1.89]	10 [0.39]	15 [0.59]	7 ... 13 [0.28 ... 0.51]	4 ... 8 [0.16 ... 0.31]	27 [1.06]	13.3 [0.52]	13.3 [0.52]
M25 x 1.5	29 [1.14]	38 ... 46 [1.50 ... 1.81]	43 ... 51 [1.69 ... 2.01]	10 [0.39]	15 [0.59]	10 ... 17 [0.39 ... 0.67]	7 ... 12 [0.28 ... 0.47]	32 [1.26]	17.3 [0.68]	17.3 [0.68]
M32 x 1.5	36 [1.42]	42 ... 50 [1.65 ... 1.97]	45 ... 53 [1.77 ... 2.09]	12 [0.47]	15 [0.59]	13 ... 21 [0.51 ... 0.83]	9 ... 14 [0.35 ... 0.55]	40 [1.57]	21.3 [0.84]	21.3 [0.84]
M40 x 1.5	46 [1.81]	52 ... 65 [2.05 ... 2.56]	58 ... 71 [2.28 ... 2.80]	12 [0.47]	18 [0.71]	17 ... 28 [0.67 ... 1.10]	12 ... 20 [0.47 ... 0.79]	51 [2.01]	28.3 [1.11]	30 [1.18]
M50 x 1.5	55 [2.17]	59 ... 72 [2.32 ... 2.83]	63 ... 76 [2.48 ... 2.99]	14 [0.55]	18 [0.71]	23 ... 35 [0.91 ... 1.38]	16 ... 25 [0.63 ... 0.98]	61 [2.40]	35.3 [1.39]	40 [1.57]
M63 x 1.5	68 [2.68]	64 ... 78 [2.52 ... 3.07]	67 ... 81 [2.64 ... 3.19]	15 [0.59]	18 [0.71]	34 ... 48 [1.34 ... 1.89]	28 ... 38 [1.10 ... 1.50]	75 [2.95]	48.3 [1.90]	53 [2.09]

*) Reduction sealing insert

Cable glands with bend protection (all dimensions in mm [inch])

Thread size	AF	L	L with long thread	L1	L1 as long thread	Cable diameter range	Cable diameter range + RSE*)	d1	d2	d4
M12 x 1.5	16 [0.63]	72 ... 77 [2.83 ... 3.03]	78 ... 83 [3.07 ... 3.27]	9 [0.35]	15 [0.59]	3 ... 6 [0.12 ... 0.24]	1 ... 3 [0.04 ... 0.12]	18 [0.71]	7.3 [0.29]	6.3 [0.25]
M16 x 1.5	20 [0.79]	81 ... 87 [3.19 ... 3.43]	87 ... 93 [3.43 ... 3.66]	9 [0.35]	15 [0.59]	4.5 ... 9 [0.19 ... 0.35]	2 ... 6 [0.08 ... 0.24]	22 [0.87]	10.3 [0.41]	9.3 [0.37]
M20 x 1.5	24 [0.94]	105 ... 112 [4.13 ... 4.41]	110 ... 117 [4.33 ... 4.61]	10 [0.39]	15 [0.59]	7 ... 13 [0.28 ... 0.51]	4 ... 8 [0.16 ... 0.31]	27 [1.06]	13.3 [0.52]	13.3 [0.52]
M25 x 1.5	29 [1.14]	120 ... 128 [4.72 ... 5.04]	125 ... 133 [4.92 ... 5.24]	10 [0.39]	15 [0.59]	10 ... 17 [0.39 ... 0.67]	7 ... 12 [0.28 ... 0.47]	32 [1.26]	17.3 [0.68]	17.3 [0.68]
M32 x 1.5	36 [1.42]	142 ... 150 [5.60 ... 5.91]	145 ... 153 [5.71 ... 6.02]	12 [0.47]	15 [0.59]	13 ... 21 [0.51 ... 0.83]	9 ... 14 [0.35 ... 0.55]	40 [1.57]	21.3 [0.84]	21.3 [0.84]

*) Reduction sealing insert

We reserve the right to make alterations to the technical data, dimensions, weights, designs and products available without notice. The illustrations cannot be considered binding.